C 51

Model:
C 51

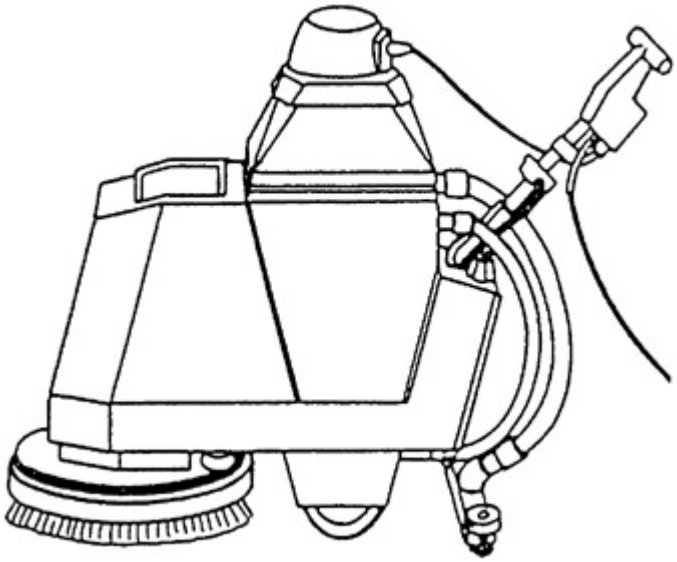

Part List US-English

09-02-2015

Nilfisk
trusted since 1906

www.nilfisk-advance.com

Table of Contents

C 51

SPARE PARTS ACCESSORIES	**3**
SPARE PARTS ACCESSORIES	**5**
SPARE PARTS ACCESSORIES	**7**
SPARE PARTS ACCESSORIES	**9**
SPARE PARTS ACCESSORIES	**11**
SPARE PARTS ACCESSORIES	**14**
SPARE PARTS ACCESSORIES	**16**
SPARE PARTS ACCESSORIES	**18**
SPARE PARTS ACCESSORIES	**20**
SPARE PARTS ACCESSORIES	**22**
SPARE PARTS ACCESSORIES	**25**
SPARE PARTS ACCESSORIES	**28**
SPARE PARTS ACCESSORIES	**30**
SPARE PARTS ACCESSORIES	**32**
SPARE PARTS ACCESSORIES	**34**

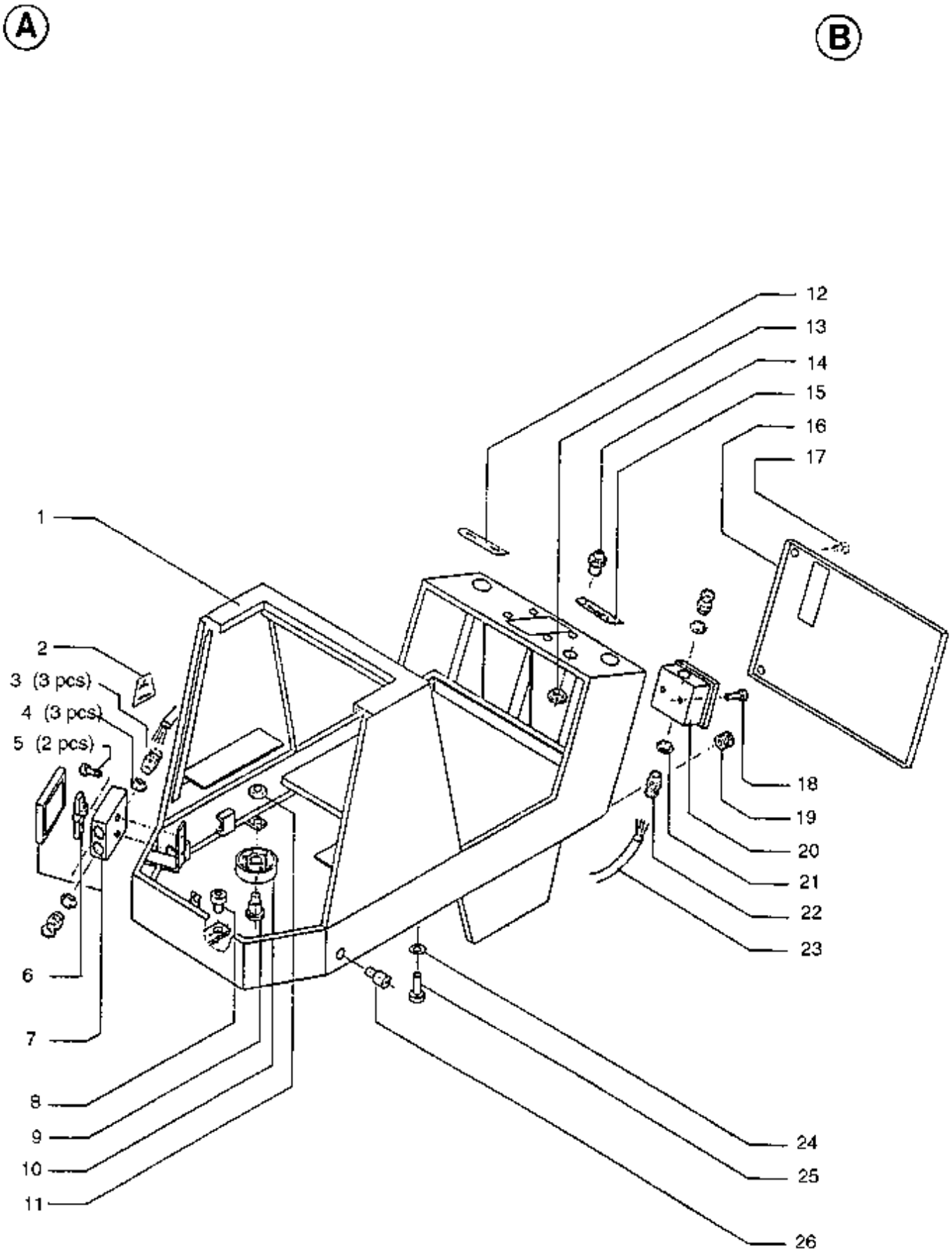
A
B
1
2
3 (3 pcs)
4 (3 pcs)
5 (2 pcs)
6
7
8
9
10
11
12
13
14
15
16
17
18
19
20
21
22
23
24
25
26

SPARE PARTS ACCESSORIES

C 51

09-02-2015

Part List ID DX3612

Pos	Part no.	Qty	Description
1	L08208100	1	FRAME
2	L08235600	1	SYMBOL PLATE
3	L08239100	3	CLAMP
4	L08239200	3	NUT PG 13.5
5	L08070400	2	CYLINDER SCREW M4X10
6	L08223800	1	TERMINAL
7	L08223901	1	TERMINAL BOX CPL
8	L08224100	1	SCREW M 8-10
9	L08000700	1	SCREW M10X25
10	L08222800	1	WHEEL FOR NOZZLE C51
11	L08250900	1	NUT
12	L08235500	1	DECAL BRUSH ADJUST.
13	L08192900	1	NUT
14	L08192800	1	CLAMP
15	L08235400	1	DECAL BRUSH ADJUST.
16	L08208400	1	HANDLEBAR FOR FLOOR NOZZ.C51
17	L08208000	1	SCREW
18	L08070400	2	CYLINDER SCREW M4X10
19	L08083400	1	RING 10X13X18
20	L08223901	1	TERMINAL BOX CPL
21	L08239100	2	CLAMP
22	L08239200	2	NUT PG 13.5
23	L08223600	1	CABLE
24	L08228600	2	WASHER PLAIN 6X18 ISO7093
25	L08043800	2	CYLINDER SCREW M6X16
26	L08228700	2	COLLAR SCREW FOR C51

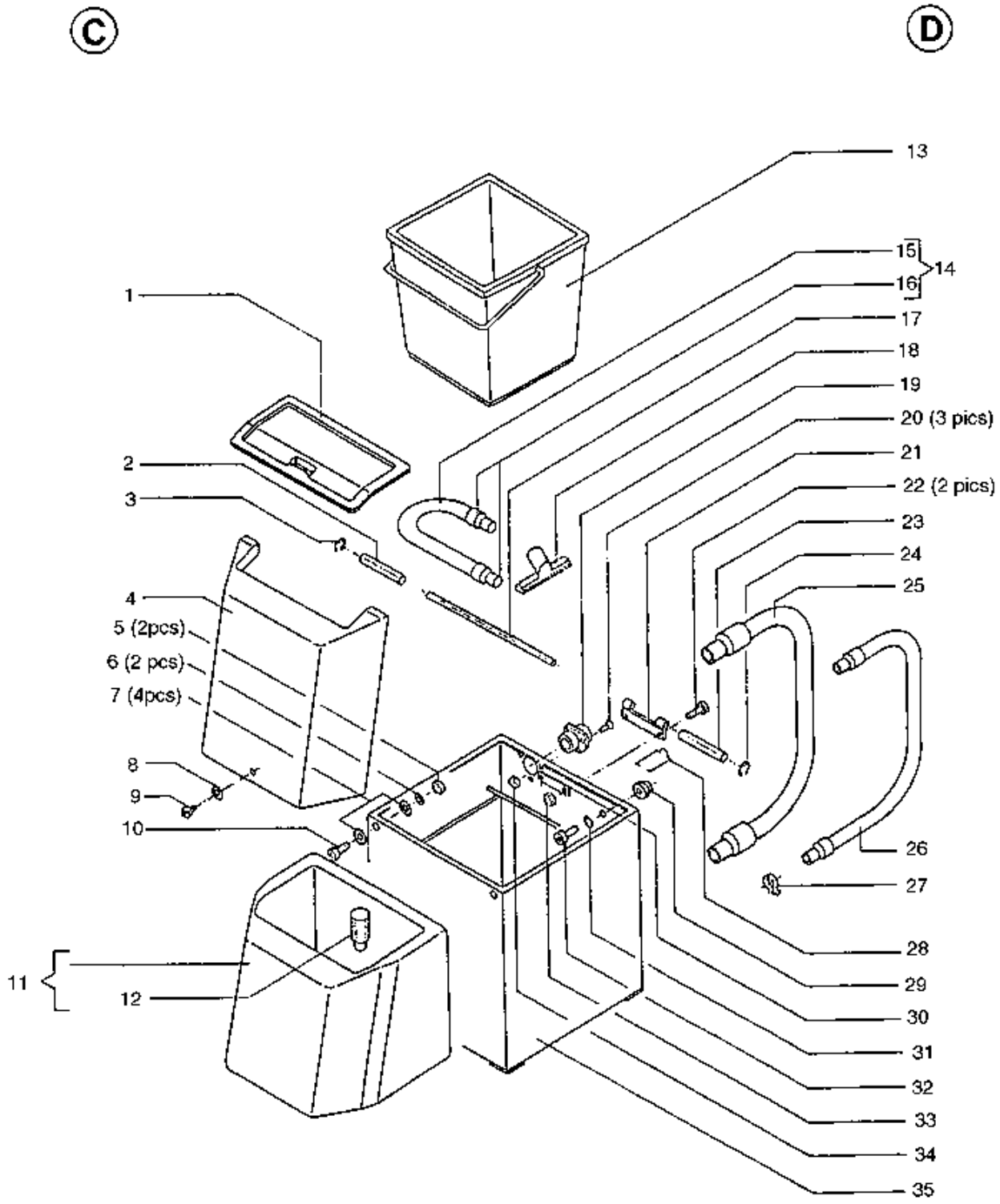
C
D
13
15
16
14
1
17
18
19
20 (3 pics)
21
2
22 (2 pics)
3
23
24
25
4
5 (2pcs)
6 (2 pcs)
7 (4pcs)
8
9
10
26
27
28
11
12
29
30
31
32
33
34
35

SPARE PARTS ACCESSORIES

C 51

09-02-2015

Part List ID DX3613

6

Pos	Part no.	Qty	Description
1	L08208300	1	LID FOR CLEAN WATER TANK C51
2	L08211200	1	BUSH
3	L08251300	1	WASHER
4	L08208200	1	GUARD PLATE FOR C51
5	33005562	2	NUT SELF L. M6 UNI7473
6	L08035800	2	PAD C38
7	L08228600	4	WASHER PLAIN 6X18 ISO7093
8	L08242900	1	WASHER
9	L08344200	1	SCREW
10	L08043800	1	CYLINDER SCREW M6X16
11	L08601066	1	TANK
12	L08217900	1	FILTER FOR CLEAN WATER
13	L08217000	1	BUCKET 18 L FOR C51
14	L08219400	1	HOSE MED NOZZLE FOR C51
15	L08235200	1	HOSE
16	L08211900	1	HOSE STUD
17	L08221400	1	SHAFT
18	L08222400	1	FLOOR NOZZ. FOR C51 CONTAINER
19	L08217100	1	BUSHING
20	L08201000	3	SCREW M4X10 UNI7688 SS
21	L08221300	1	HOLDER
22	L08043800	2	CYLINDER SCREW M6X16
23	L08211200	1	BUSH
24	L08251300	1	WASHER
25	L08219300	1	DRAIN HOSE FOR C51
26	L08219500	1	HOSE FOR TANK DRAIN C51
27	L08236100	1	CLAMP 12/ 20- 32
28	L08217300	1	RETAINING PLATE
30	L08251100	1	LOCK PLATE FOR LID C51
31	L08050400	1	WASHER B 6.4
32	L08043800	1	CYLINDER SCREW M6X16
33	33005562	1	NUT SELF L. M6 UNI7473
34	L08200500	3	NUT
35	L08216700	1	CONTAINER

E F

NEUE TURNINE - (siehe Plan 159 Z)

NEW TURBINE - (see plan 159 Z)

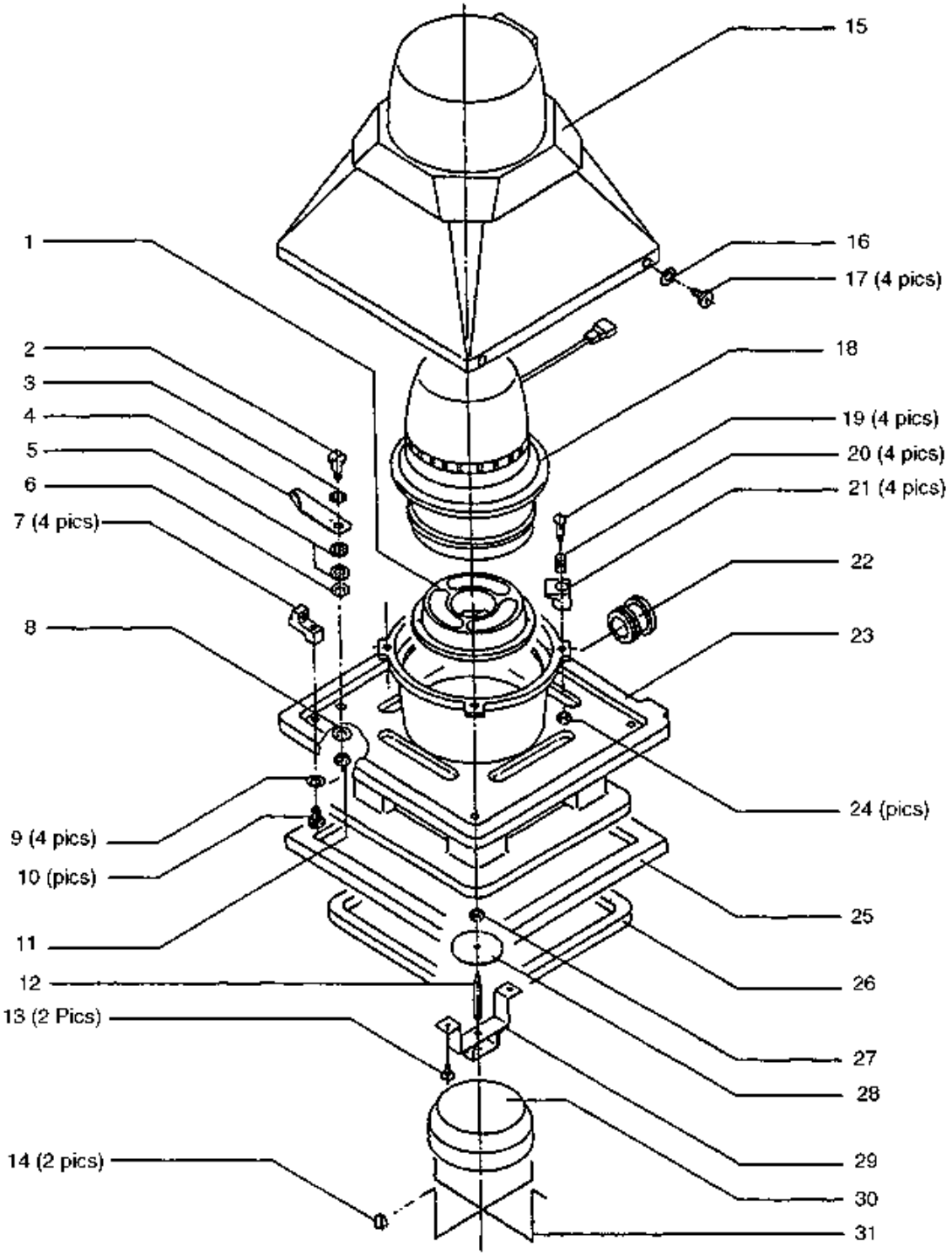

SPARE PARTS ACCESSORIES

C 51

09-02-2015

Part List ID DX3614

8

Pos	Part no.	Qty	Description
1	L08407400	1	FILTER FOR NILFISK C51
2	L08236800	1	SCREW
3	L08163500	1	SPRING DISK
4	L08236700	1	HOLDER
6	L08215400	1	PAD
7	L08221600	4	SPACER
8	L08215400	1	PAD
9	L08242900	4	WASHER
10	L08221500	4	SCREW
11	L08250900	1	NUT
12	L08220900	1	SCREW
13	L08243900	2	SCREW
14	L08251200	2	NUT M3
15	L08222300	1	TOP COVER FOR C51
16	L08242900	1	WASHER
17	L08221500	4	SCREW
19	L08220100	4	SCREW M6X16 DIN923
20	L08220200	4	SPRING
21	L08220300	4	HOLDER FOR MOTOR
22	L08306000	1	BUSHING FOR HOSE
23	L08214200	1	BRACKET FOR MOTOR I C51
24	33005562	4	NUT SELF L. M6 UNI7473
25	L08221800	1	FOAM RUBBER SEAL FOR LID C51
28	L08221000	1	SEALING RING Ø 60X1
29	L08220700	1	STOP FOR FLOAT
30	L08221100	1	FLOAT FOR DIRTY WATER C51
31	L08221200	1	BASKET FOR FLOAT

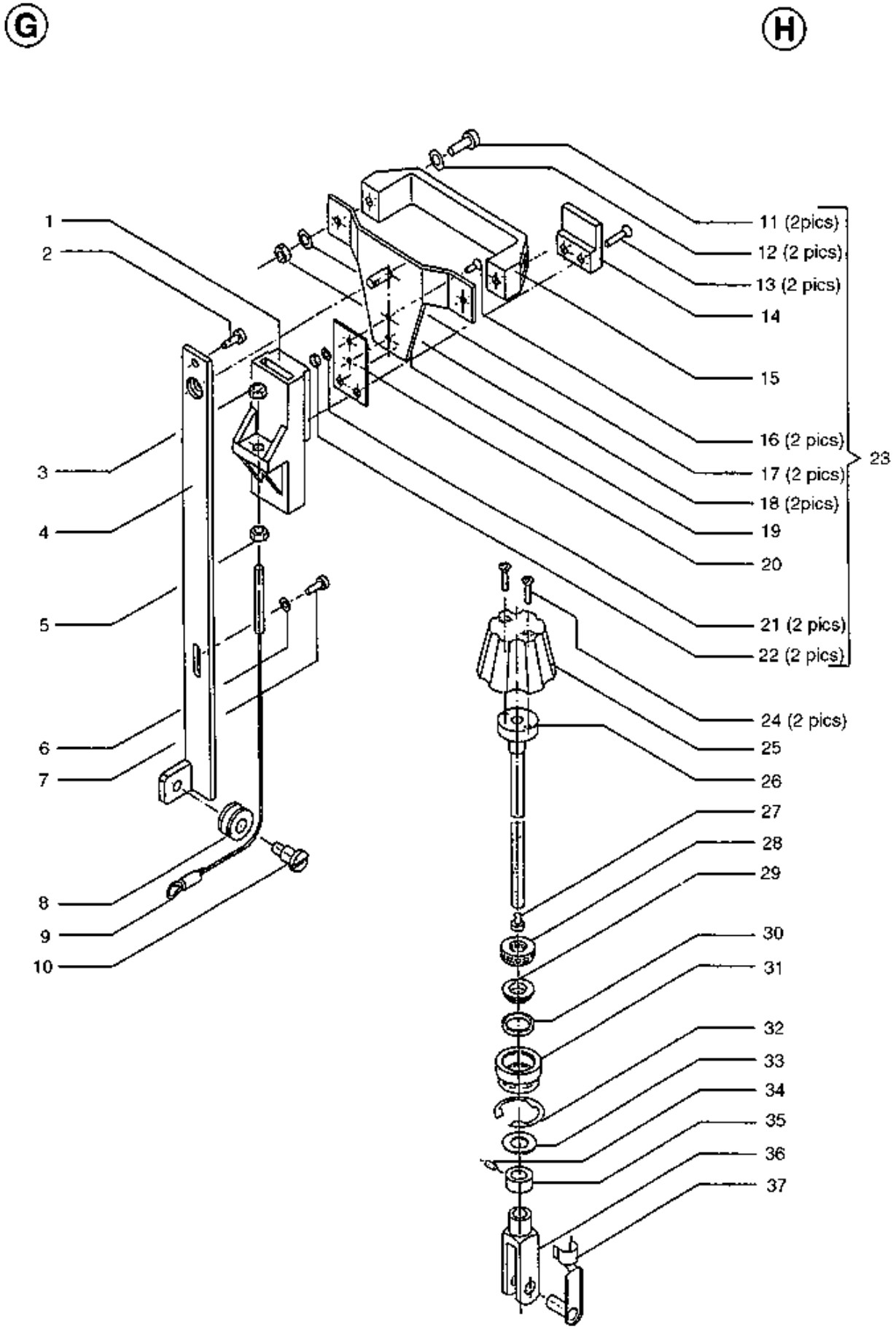
G
H
1
2
3
4
5
6
7
8
9
10
11 (2pics)
12 (2 pics)
13 (2 pics)
14
15
16 (2 pics)
17 (2 pics)
18 (2pics)
19
20
21 (2 pics)
22 (2 pics)
23
24 (2 pics)
25
26
27
28
29
30
31
32
33
34
35
36
37

SPARE PARTS ACCESSORIES

C 51

09-02-2015

Part List ID DX3615

10

Pos	Part no.	Qty	Description
1	L08214800	1	SUPPORT FOR C51 HANDLE
2	L08060400	1	SCREW
3	33005562	1	NUT SELF L. M6 UNI7473
4	L08214700	1	GUIDE RAIL FOR NOZZLE
5	33005562	1	NUT SELF L. M6 UNI7473
6	L08040400	1	WASHER FLAT 5X10
7	L08060400	1	SCREW
8	L08234100	1	ROPE PULLEY DIA. 25-11
9	L08214300	1	ROD FOR LOCK.C51
10	L08234600	1	SCREW
11	L08249100	2	SCREW
12	L08050400	2	WASHER B 6.4
13	L08274600	2	SCREW
14	L08320400	1	STOP
15	L08215100	1	HANDLE
16	L08101900	2	COUNTERSUNK SCREW M4X8
17	L08035800	2	PAD C38
18	33005562	2	NUT SELF L. M6 UNI7473
19	L08214900	1	PLATE
20	L08215000	1	SPRING FOR HANDLE C51
21	33005862	2	WASHER M4 UNI8842A
22	L08200500	2	NUT
23	L08209000	1	LOCK FOR NOZZLE C51
24	L08215300	2	SCREW
25	L08215900	1	HANDLE BAR GRIP
26	L08216000	1	THREADED ROD CPL.
27	L08234800	1	SCREW M 6X10
28	L08215600	1	BEARING
29	L08231100	1	DISC Ø 13
30	L08231200	1	WASHER DIA. 14.2
33	L08601166	1	PAD 10.5 VZ
34	L08242100	1	SCREW
35	L08242000	1	RING
36	L08215700	1	FORK 10X40
37	L08215800	1	BOLT

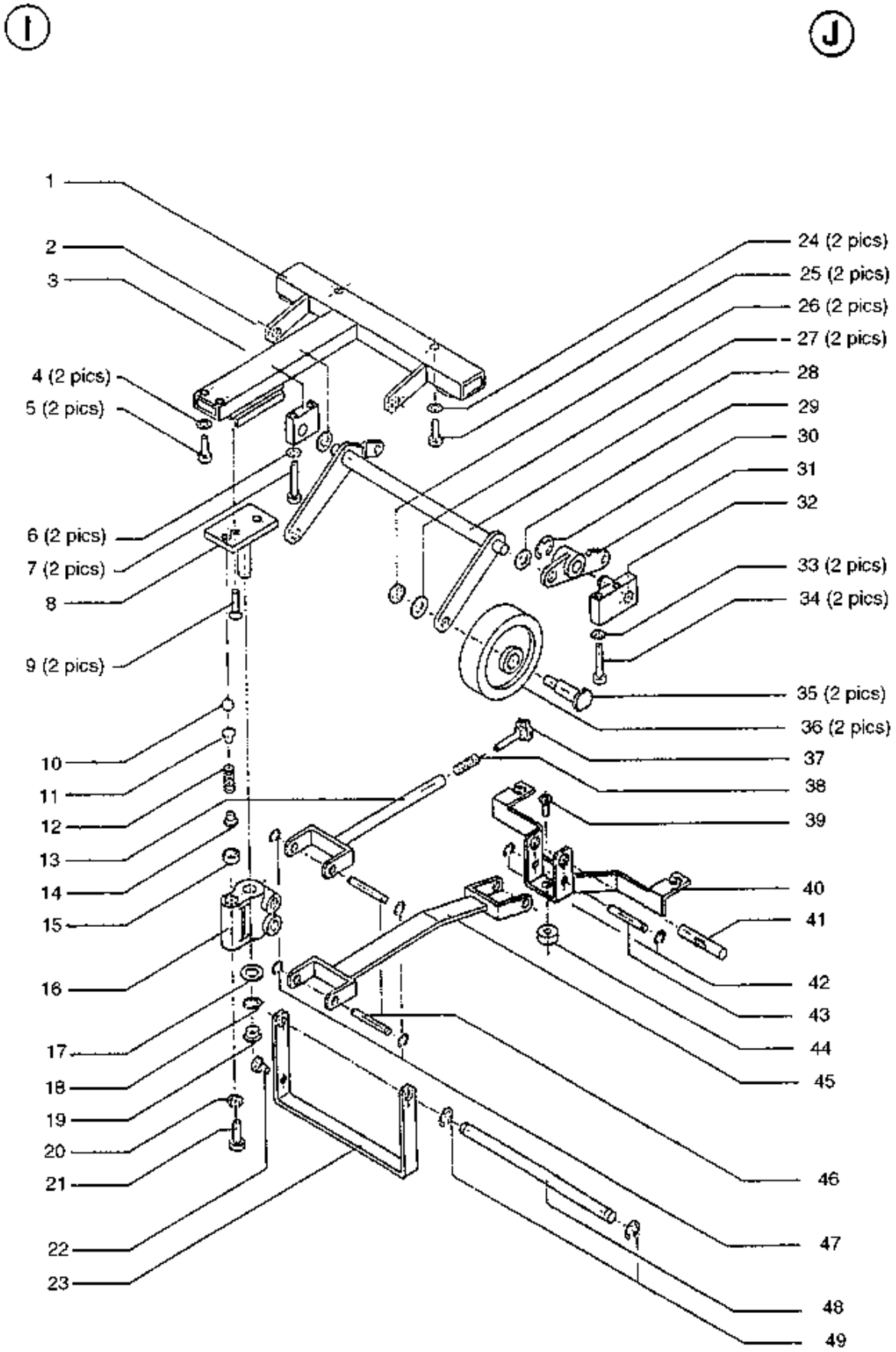
I
J
1
2
3
4 (2 pics)
5 (2 pics)
6 (2 pics)
7 (2 pics)
8
9 (2 pics)
10
11
12
13
14
15
16
17
18
19
20
21
22
23
24 (2 pics)
25 (2 pics)
26 (2 pics)
27 (2 pics)
28
29
30
31
32
33 (2 pics)
34 (2 pics)
35 (2 pics)
36 (2 pics)
37
38
39
40
41
42
43
44
45
46
47
48
49

SPARE PARTS ACCESSORIES

C 51

09-02-2015

Part List ID DX3616

12

Pos	Part no.	Qty	Description
1	L08208500	1	RACK
2	L08251600	1	WASHER
3	L08211600	1	BLOCK
4	L08050400	2	WASHER B 6.4
5	L08061800	2	SCREW M 6X30 C38
6	L08035800	2	PAD C38
7	L08210000	2	SCREW
8	L08213500	1	BOLT
10	L08212000	1	STEEL BALL
11	L08233600	1	SCREW
12	L08234400	1	SPRING
13	L08291400	1	STRUT
14	L08233600	1	SCREW
15	L08212200	1	BUSH
16	L08213900	1	HOLDER
17	L08602657	1	PAD
18	L08247600	1	SEEGER RING
19	L08214100	1	BLINDING BUNG
20	L08250900	1	NUT
21	L08234500	1	SCREW M 10-30
22	L08214600	1	SCREW M5X4
23	L08214400	1	BAR
24	L08050400	2	WASHER B 6.4
25	L08061800	2	SCREW M 6X30 C38
26	L08209600	2	NUT
27	L08209500	2	PAD
29	L08251600	1	WASHER
30	L08073500	1	SEEGER RING FOR 20MM AXLE
31	L08210700	1	LEVER
32	L08209800	1	HOLDER
33	L08035800	2	PAD C38
34	L08210000	2	SCREW
35	L08209300	2	BOLT FOR WHEEL C51
36	L08209400	2	WHEEL FOR C51
37	L08324100	1	STAR GRIP SCREW M8-70 D
38	L08327200	1	SPRING
39	L08264900	1	SCREW FOR MOUNTING
40	L08212500	1	HOLDER FOR NOZZLE C51
41	L08212600	1	BOLT FOR NOZZLE HOLDER
42	L08211800	1	RING RADIAL D 8 UNI7434
43	L08213400	1	BOLT
44	L08257100	1	PROP M6 D20X12
45	L08213300	1	RETAINING ARM FOR NOZZLE C51

SPARE PARTS ACCESSORIES

C 51

09-02-2015

Part List ID DX3616

13

Pos	Part no.	Qty	Description
46	L08213400	1	BOLT
47	L08211800	1	RING RADIAL D 8 UNI7434
48	L08214500	1	ROD
49	L08044600	1	RING RADIAL D 10 UNI7434

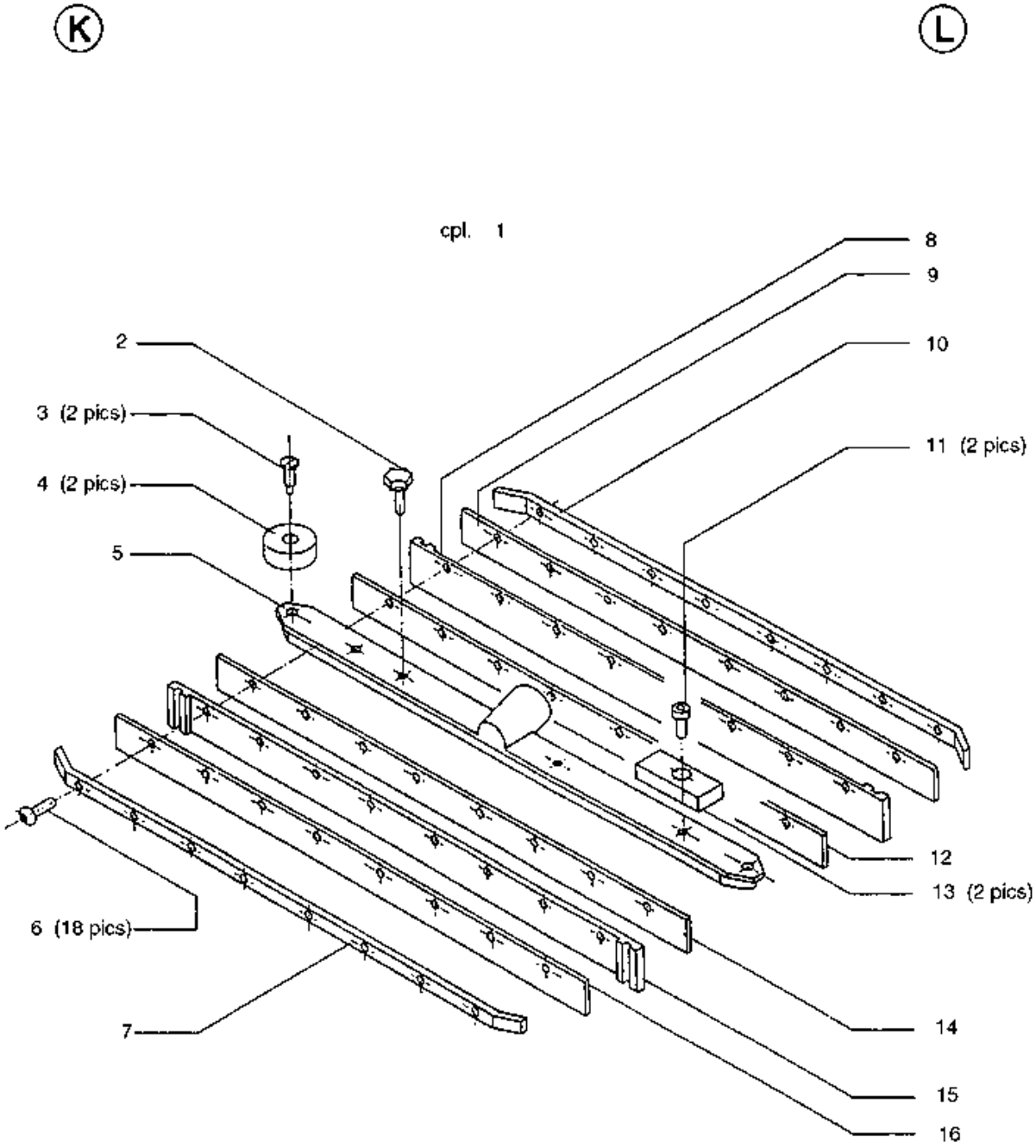
K
L
cpl. 1
2
3 (2 pics)
4 (2 pics)
5
6 (18 pics)
7
8
9
10
11 (2 pics)
12
13 (2 pics)
14
15
16

SPARE PARTS ACCESSORIES

C 51

09-02-2015

Part List ID DX3617

15

Pos	Part no.	Qty	Description
1	L08219700	1	FLOOR NOZZLE FOR C51
2	L08212800	1	SCREW M6X16
3	L08000700	2	SCREW M10X25
4	L08222800	2	WHEEL FOR NOZZLE C51
5	L08222900	1	SQUEEGEE
6	L08222700	18	SCREW M6X16
7	L08223000	1	RETAINING STRIP FOR NOZZLE
8	L08223100	1	RAIL FOR NOZZLE C51
9	L08223200	1	RAIL BRACE FOR NOZZLE
10	L08223000	1	RETAINING STRIP FOR NOZZLE
11	L08043800	1	CYLINDER SCREW M6X16
12	L08223200	1	RAIL BRACE FOR NOZZLE
13	L08238500	2	WEIGHT
14	L08223200	1	RAIL BRACE FOR NOZZLE
15	L08223100	1	RAIL FOR NOZZLE C51
16	L08223200	1	RAIL BRACE FOR NOZZLE

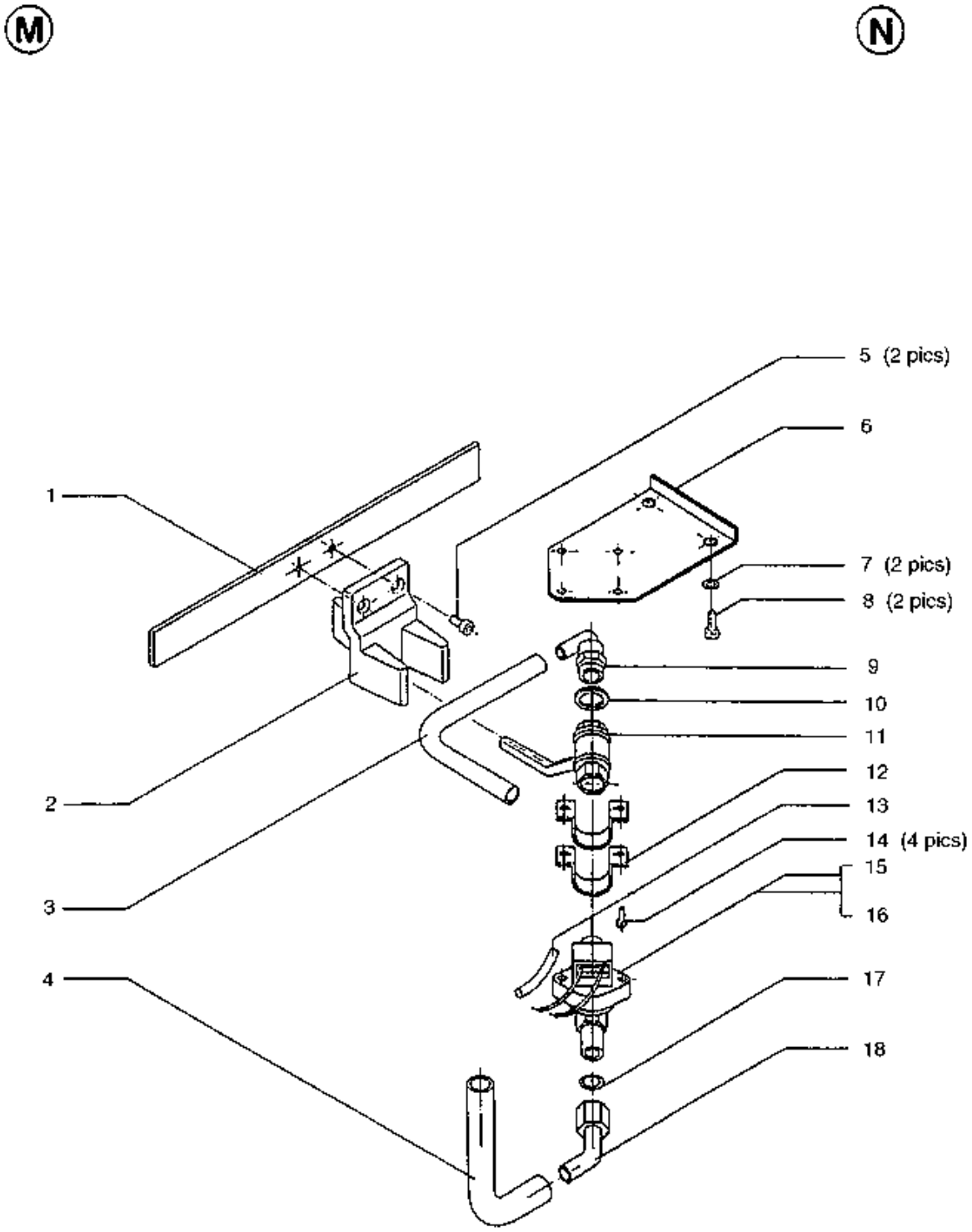
M
N
1
2
3
4
5 (2 pics)
6
7 (2 pics)
8 (2 pics)
9
10
11
12
13
14 (4 pics)
15
16
17
18

SPARE PARTS ACCESSORIES

C 51

09-02-2015

Part List ID DX3618

17

Pos	Part no.	Qty	Description
1	L08226200	1	LEDGE
2	L08226300	1	SLIDE
3	L08225800	1	HOSE DIA. 9-260
4	L08601065	1	HOSE
5	L08234800	2	SCREW M 6X10
6	L08226100	1	HOLDER FOR VALVE FOR C51
7	L08050400	2	WASHER B 6.4
8	L08043800	2	CYLINDER SCREW M6X16
9	L08225600	1	HOSE ADAPTER 3/8 I
10	L08226400	1	SEAL O-RING
11	L08225200	1	VALVE FOR CLEAN WATER. C51
12	L08226000	1	PIPE SADDLE
13	L08239800	1	HOSE DIA. 7X380
14	L08220000	4	SCREW FOR ENGINE BRACKET
15	L08224200	1	VALVE 110/125V 50/60HZ
16	L08224400	1	MAGNETIC VALVE FOR C51 220V
17	L08601070	1	O-RING
18	L08600414	1	SHACKLE

O

GTES-ch-motor 1 XX

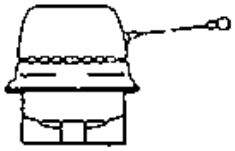

NB! All other spare parts - than below mentioned - to be ordered by A/S Fisker & Nielsen ~ cf. Book 1 - plan 152 and 153.

2 CABLE 910 mm.

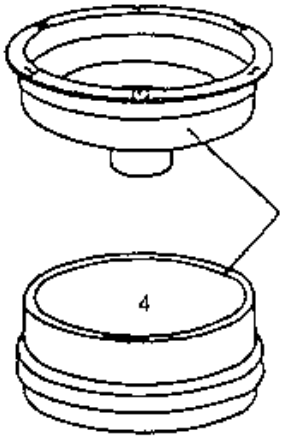

P

compl. 5 110/125 V 50/60 HZ
6 220/250 V 50/60 HZ

FROM SERIAL NO. 502550

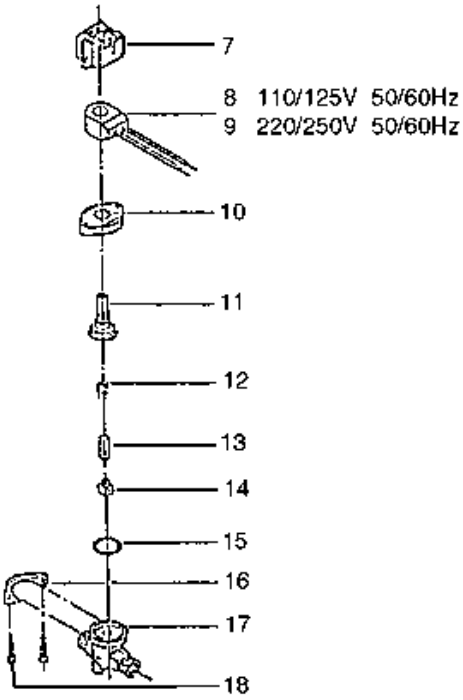

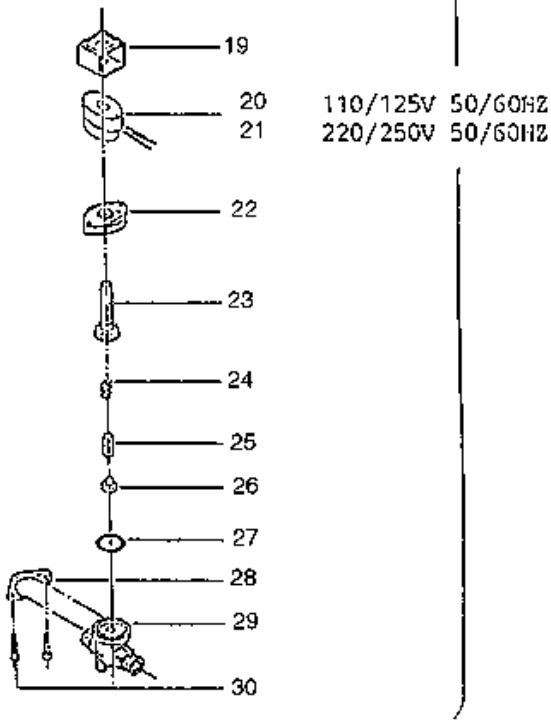

SPARE PARTS ACCESSORIES

C 51

09-02-2015

Part List ID DX3619

Pos	Part no.	Qty	Description
2	L08219800	1	CABLE FOR C-51. 910 MM
3	L08241700	1	TURBINE COVER COMPLETE C51
4	L08240200	1	PROTECTIVE COVER
5	L08224200	1	VALVE 110/125V 50/60HZ
6	L08224400	1	MAGNETIC VALVE FOR C51 220V
7	L08247900	1	COIL SUPPORT
8	L08248900	1	COIL 110/125 V
9	L08224400	1	MAGNETIC VALVE FOR C51 220V
10	L08248100	1	VALVE BODY UPPER PART
11	L08248200	1	GUIDE TUBE
12	L08248300	1	ARMATURE SPRING
13	L08248400	1	ARMATURE
14	L08249000	1	VALVE PLATE
15	L08248500	1	WASHER
16	L08248600	1	HOLDER
17	L08248700	1	VALVE BODY
18	L08248800	1	SCREW
21	L08316300	1	SPOOL
22	L08248100	1	VALVE BODY UPPER PART
23	L08316400	1	TUBE CPL.
24	L08248300	1	ARMATURE SPRING
25	L08248400	1	ARMATURE
26	L08249000	1	VALVE PLATE
27	L08248500	1	WASHER
28	L08248600	1	HOLDER
29	L08248700	1	VALVE BODY
30	L08248800	1	SCREW

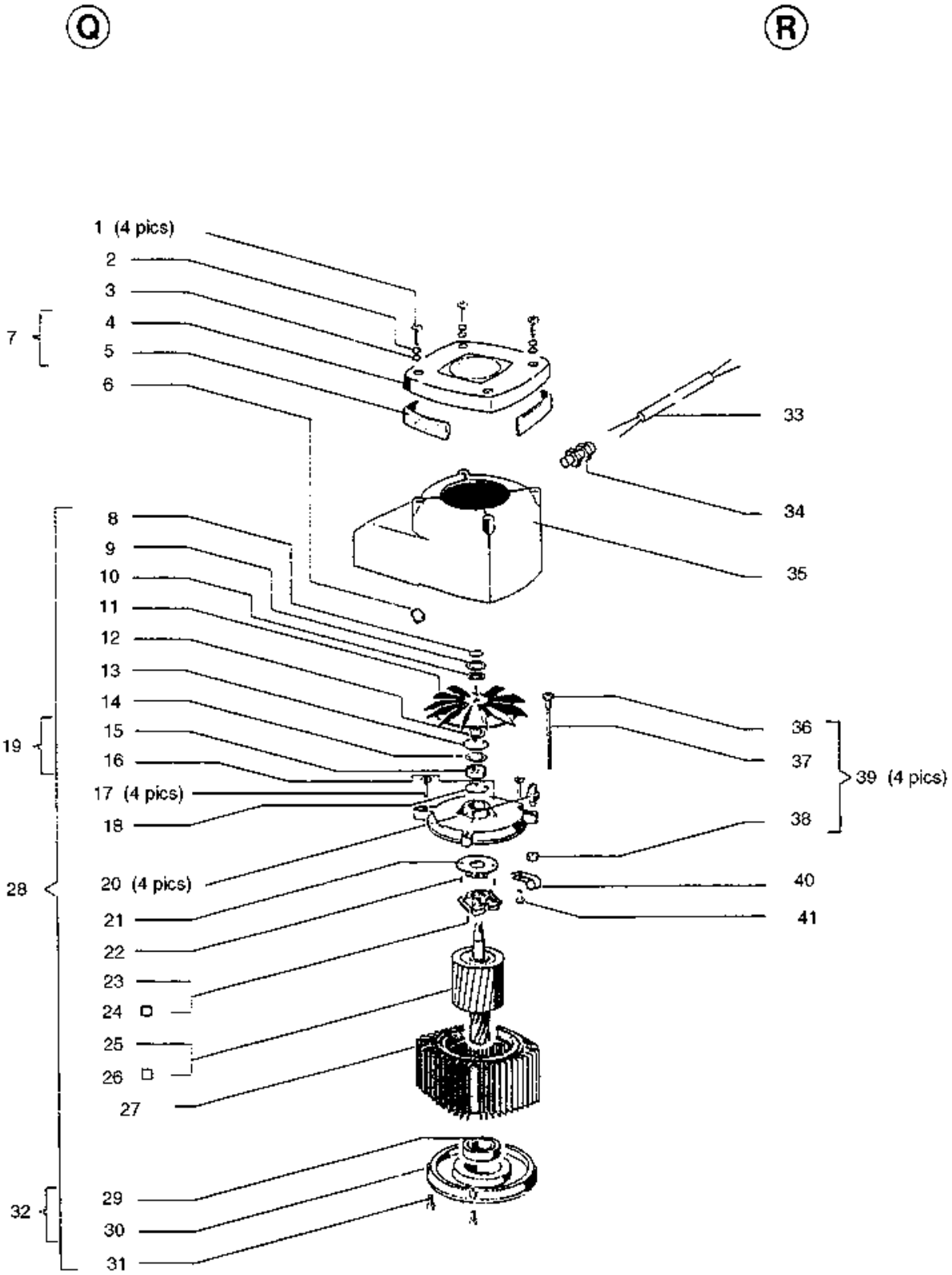
Q
R
1 (4 pics)
2
3
4
5
6
7
8
9
10
11
12
13
14
15
16
17 (4 pics)
18
19
20 (4 pics)
21
22
23
24
25
26
27
28
29
30
31
32
33
34
35
36
37
38
39 (4 pics)
40
41

SPARE PARTS ACCESSORIES

C 51

09-02-2015

Part List ID DX36110

21

Pos	Part no.	Qty	Description
1	L08182800	4	SCREW M5X25
2	L08040400	1	WASHER FLAT 5X10
3	L08040500	1	WASHER
4	L08266000	1	MOTOR COVER WITH BUFFER 4
5	L08180900	1	BUFFER-MOTOR COVER
6	L08192900	1	NUT
8	L08182600	1	WASHER
9	L08183300	1	WASHER
10	L08163500	1	SPRING DISK
11	L08166900	1	VENTILATION WHEEL
12	L08183300	1	WASHER
13	L08040900	1	RING
14	L08601171	1	BEARING
15	L08040800	1	BEARING
17	L08199800	4	COUNTERSUNK SCREW M5X25
18	L08040900	1	RING
19	L08185300	1	MOTOR HOUSING TOP
20	L08185500	4	INSULATING BUSH
21	L08041000	1	DISCONNECTION UPPER PART
22	L08041100	1	SCREW
23	L08041200	1	SWITCH LOWER PART
24	L08045600	1	REVERSER
25	L08190400	1	ROTOR W PIN. 50 HZ
26	L08190500	1	ROTOR W.SHAFT 60HZ
29	L08051600	1	BALL BEARING
31	L08183000	4	CYLINDER SCREW M5X16
32	L08184900	1	END PLATE
33	L08223700	1	CABLE
34	L08192800	1	CLAMP
36	L08167300	1	SPECIAL NUT
37	L08167600	1	PIN M 5X135
38	L08081100	1	NUT C38
39	L08189800	4	MOTOR SCREW CPL. M4.5 X 147.5
40	L08239900	1	CLAMP D.6 WHITE

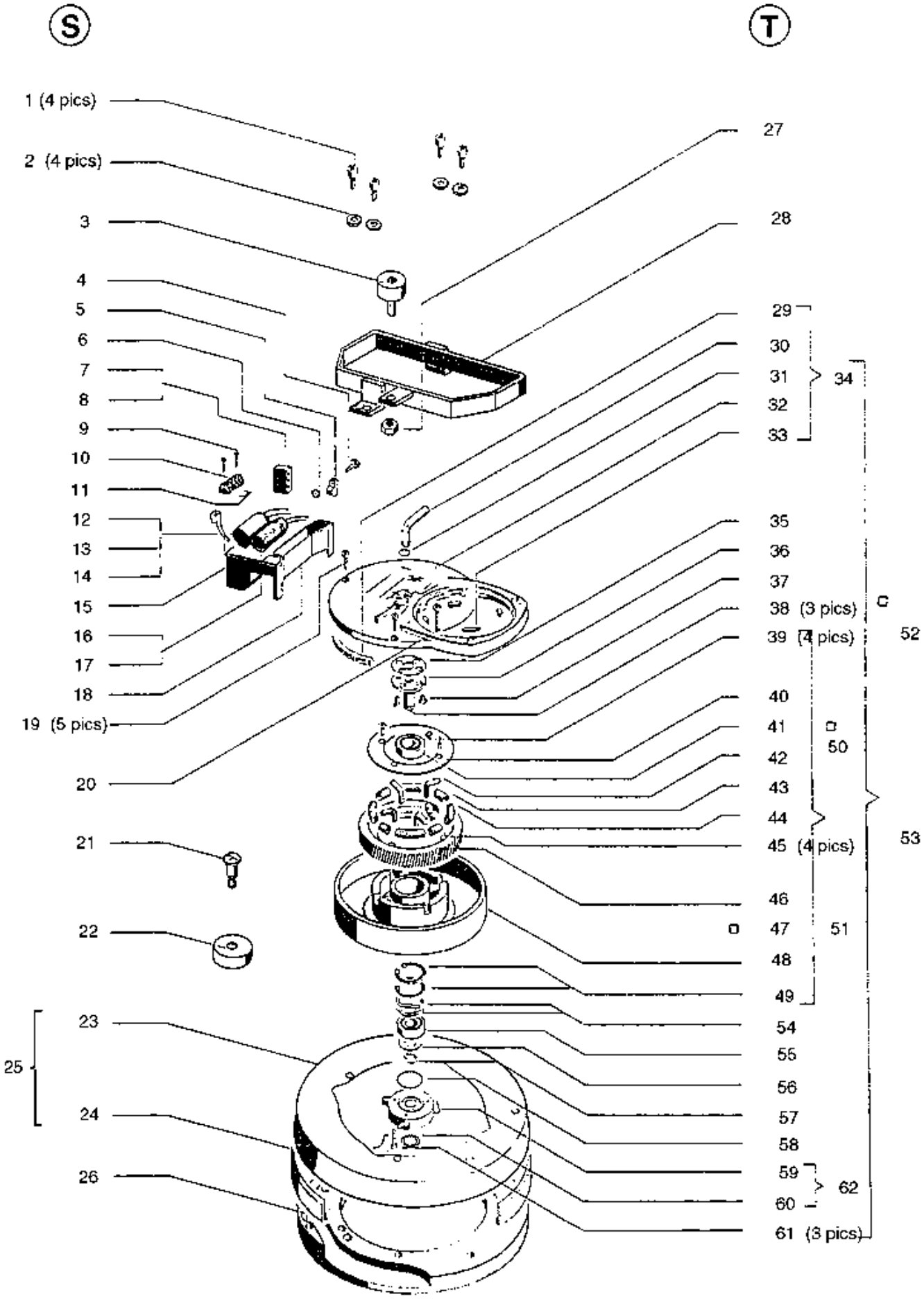
S
T
1 (4 pics)
2 (4 pics)
3
4
5
6
7
8
9
10
11
12
13
14
15
16
17
18
19 (5 pics)
20
21
22
23
24
25
26
27
28
29
30
31
32
33
34
35
36
37
38 (3 pics)
39 (4 pics)
52
40
41
50
42
43
44
45 (4 pics)
53
46
47
51
48
49
54
55
56
57
58
59
60
62
61 (3 pics)

SPARE PARTS ACCESSORIES

C 51

09-02-2015

Part List ID DX36111

Pos	Part no.	Qty	Description
2	L08050400	4	WASHER B 6.4
4	L08101900	1	COUNTERSUNK SCREW M4X8
5	L08193000	1	CLAMP CABLE BLACK
6	33005500	1	NUT HEX M4 UNI5588
7	L08188500	1	CONTACT
8	L08046000	1	SWITCH 20 A
9	L08095900	1	CHEESE-HEAD SCREW
10	L08048900	1	BOARD TERMINAL 5 ELEMENT
12	L08188900	1	CONDENSER FOR 511A
13	L08184700	1	CONDENSER
14	L08188900	1	CONDENSER FOR 511A
16	L08048600	1	CONDENSER 421/511A
17	L08364000	1	CONDENSER 250MF
19	L08182900	5	CYLINDER SCREW M5X20
20	L08189500	2	CYLINDER SCREW M5X30
21	L08000700	1	SCREW M10X25
22	L08222800	1	WHEEL FOR NOZZLE C51
24	L08180800	1	BUTT EDGE FOR 511 A
25	L08233500	1	WEIGHT C 51
26	L08266300	1	COVER D 460 C 51
27	33005504	1	NUT HEX M8 UNI5588
28	L08218900	1	MOTOR FRAME FOR C51
29	L08054900	1	FILTER GASKET
30	L08197000	1	TUBE
31	L08091900	1	WASHER D 9X2
32	L08197100	1	PLATE WITH FLANGE
33	L08198500	1	GEAR PLATE COMP.421A-511A
34	L08198500	1	GEAR PLATE COMP.421A-511A
35	L08189900	1	SEAL
36	L08197300	1	DRIVE FLANGE FOR 511A
37	L08183200	1	COUNTERSUNK SCREW M8X10
38	L08042500	3	COUNTERSUNK SCREW M8X16
39	L08035400	4	COUNTERSUNK SCREW M6X16
40	L08170000	1	PAD
41	L08183900	1	BEARING BALL 6204 DDU
42	L08162400	1	PIPE
43	L08042900	1	SPRING
44	L08042800	1	SPRING
45	L08190600	4	PIN M 8
46	L08170700	1	GEAR WHEEL
47	L08183600	1	GEAR WHEEL M 1.5. Z 115
48	L08170400	1	GEAR BOX
49	33006176	1	RING D 47 UNI7437

SPARE PARTS ACCESSORIES

C 51

09-02-2015

Part List ID DX36111

24

Pos	Part no.	Qty	Description
50	L08191200	1	GEAR BOX 60 HZ CPL.
51	L08191100	1	GEAR BOX 50 HZ CPL.
52	L08177601	1	GEARING 60HZ-FOR C51U 511A
53	L08177501	1	GEARING 511A+C51
54	L08183500	1	DISTANCE WASHER BEARING
55	L08183900	1	BEARING BALL 6204 DDU
56	L08167900	1	WASHER
57	L08182700	1	RING D 22 SP.1.75 UNI7436
58	L08348500	1	O-RING FOR STAND 47X2 NBR 70
60	L08348600	1	SEAL
61	L08183400	3	CYLINDER SCREW M6X25
62	L08349000	1	HOLDER FOR BRUSH 511A/C51

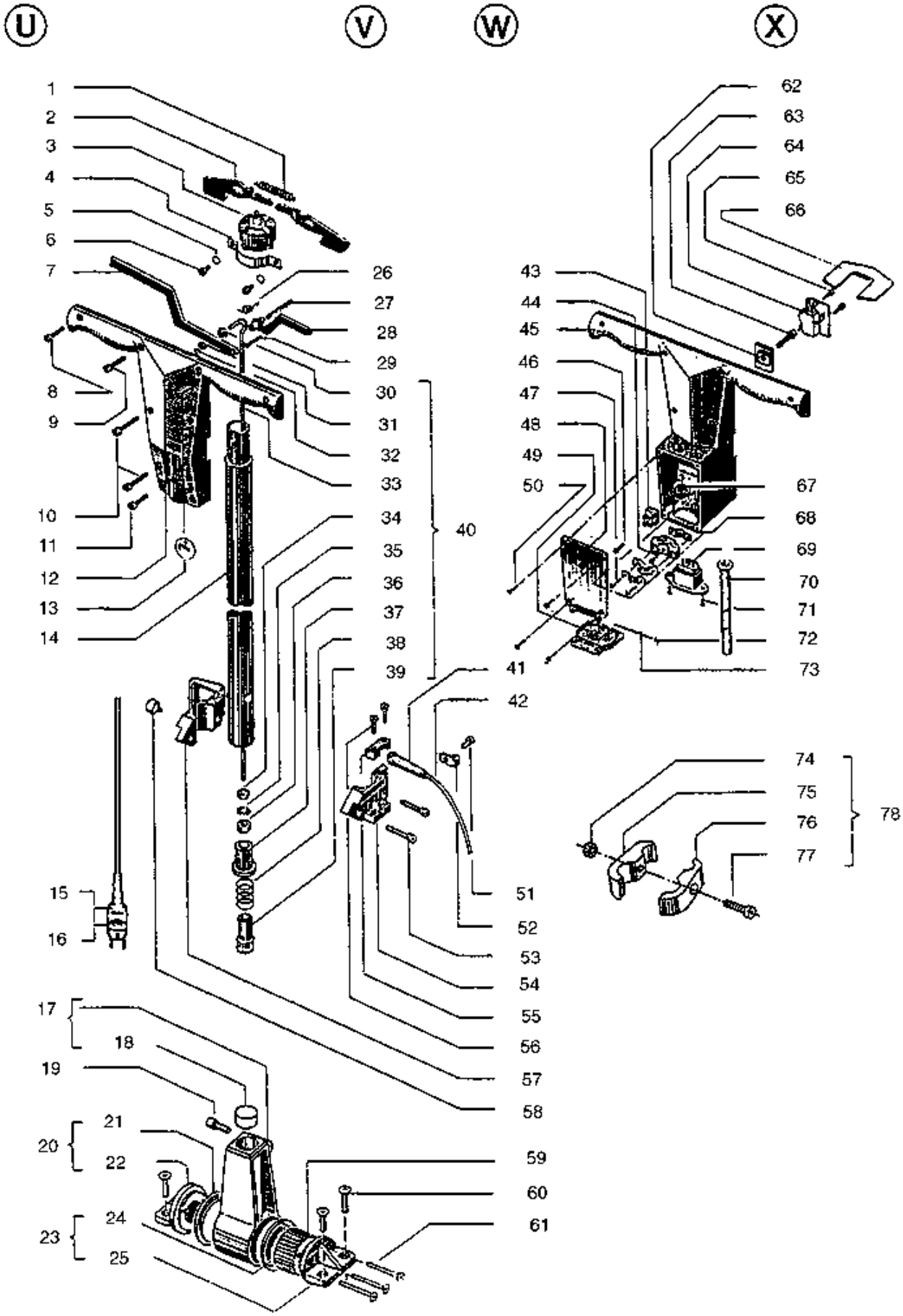
U
V
W
X
1
2
3
4
5
6
7
8
9
10
11
12
13
14
15
16
17
18
19
20
21
22
23
24
25
26
27
28
29
30
31
32
33
34
35
36
37
38
39
40
41
42
43
44
45
46
47
48
49
50
51
52
53
54
55
56
57
58
59
60
61
62
63
64
65
66
67
68
69
70
71
72
73
74
75
76
77
78

SPARE PARTS ACCESSORIES

C 51

09-02-2015

Part List ID DX36112

26

Pos	Part no.	Qty	Description
1	L08608541	1	TENSION SPRING
2	L08080200	1	BREAKER LEVER
3	L08080300	1	SWITCH
4	L08088800	1	CLAMP
5	33005862	1	WASHER M4 UNI8842A
6	L08070400	1	CYLINDER SCREW M4X10
7	L08080500	1	LEVER ARM
9	L08080800	1	CYLINDER SCREW M5X25
10	L08080900	1	CYLINDER SCREW M5X40
11	L08080700	1	CYLINDER SCREW M5X20
12	L08186300	1	SWITCH HOUSING FRONT
13	L08241800	1	DECAL WATER ADJUST.
14	L08601398	1	HANDLE TUBE 440 MM LONG
15	L08227100	1	CABLE FOR C38/C51 20M
16	L08227800	1	CABLE POWER SUPPLY WITHOUT PLUG
17	L08188600	1	LEVER ARM
18	L08346600	1	BEARING
19	33004365	1	SCREW M8X20 UNI5931
20	L08605035	1	HOLDER
21	L08160200	1	PLAIN BEARING
22	L08605035	1	HOLDER
23	L08605035	1	HOLDER
24	L08160200	1	PLAIN BEARING
25	L08605035	1	HOLDER
26	L08244200	1	RETURN SPRING FOR HANDLE C51
27	L08081800	1	PIN FOR HANDLE 5M6X40
28	L08227600	1	HANDLE FOR C51
29	L08082000	1	PIN 5M6X22
30	L08082100	1	BUSH
31	L08082200	1	WASHER
32	L08082300	1	SEEGER RING
33	L08227200	1	HANDLE CONNECTING ROD
34	L08081100	1	NUT C38
35	L08040300	1	WASHER C38
36	33005505	1	NUT HEX M10 UNI5588
37	L08081300	1	BEARING
38	L08081400	1	SPRING FOR HANDLE ROD
39	L08081500	1	BEARING FOR HANDLE C51
40	L08226600	1	HANDLE RISE BAR C 51
41	L08088000	1	CABLE HANDLE
42	L08227700	1	CABLE
43	L08187300	1	BOARD TERMINAL 2 ELEMENT
44	L08070400	1	CYLINDER SCREW M4X10

SPARE PARTS ACCESSORIES

C 51

09-02-2015

Part List ID DX36112

27

Pos	Part no.	Qty	Description
45	L08186200	1	CONTACT INCL. PLUG
46	L08093800	1	SCREW 2.9X16 UNI6954 THD FORMING
47	L08080600	1	CYLINDER SCREW M4X20
48	L08186500	1	PLATE IN CONTACT
49	L08186600	1	COVER FOR SOCKET
50	L08101900	1	COUNTERSUNK SCREW M4X8
51	L08105400	1	NUT M 4X8
52	L08239900	1	CLAMP D.6 WHITE
53	L08043800	1	CYLINDER SCREW M6X16
54	L08601414	1	TRACTION RELIEF
55	L08187000	1	STRAP
56	L08080600	1	CYLINDER SCREW M4X20
57	L08601413	1	CABLE HOLDER
58	L08234700	1	SHOCK ABSORBER DIA.18-7.
59	L08084500	1	TOOTHED RING
60	L08084400	1	COUNTERSUNK SCREW M8X25
61	L08084700	1	COUNTERSUNK SCREW M6X54
62	L08228100	1	HOLDER
63	L08056400	1	CYLINDER SCREW M 4X16
64	L08227900	1	SWITCH FOR C51
65	L08228000	1	SCREW M 3-25
66	L08227500	1	INSULATION C 51
67	L08082900	1	RUBBER RING
68	L08080400	1	CLAMP
69	L08187400	1	PLUG BOX
70	L08081700	1	CABLE SLEEVE HANDLE
71	L08196200	1	SCREW C38
72	L08095400	1	SPRING
73	L08095600	1	HINGE PIN
74	L08081100	1	NUT C38
75	L08601415	1	TRACTION RELIEF
76	L08601416	1	TRACTION RELIEF
77	L08080800	1	CYLINDER SCREW M5X25
78	L08601417	1	TRACTION RELIEF

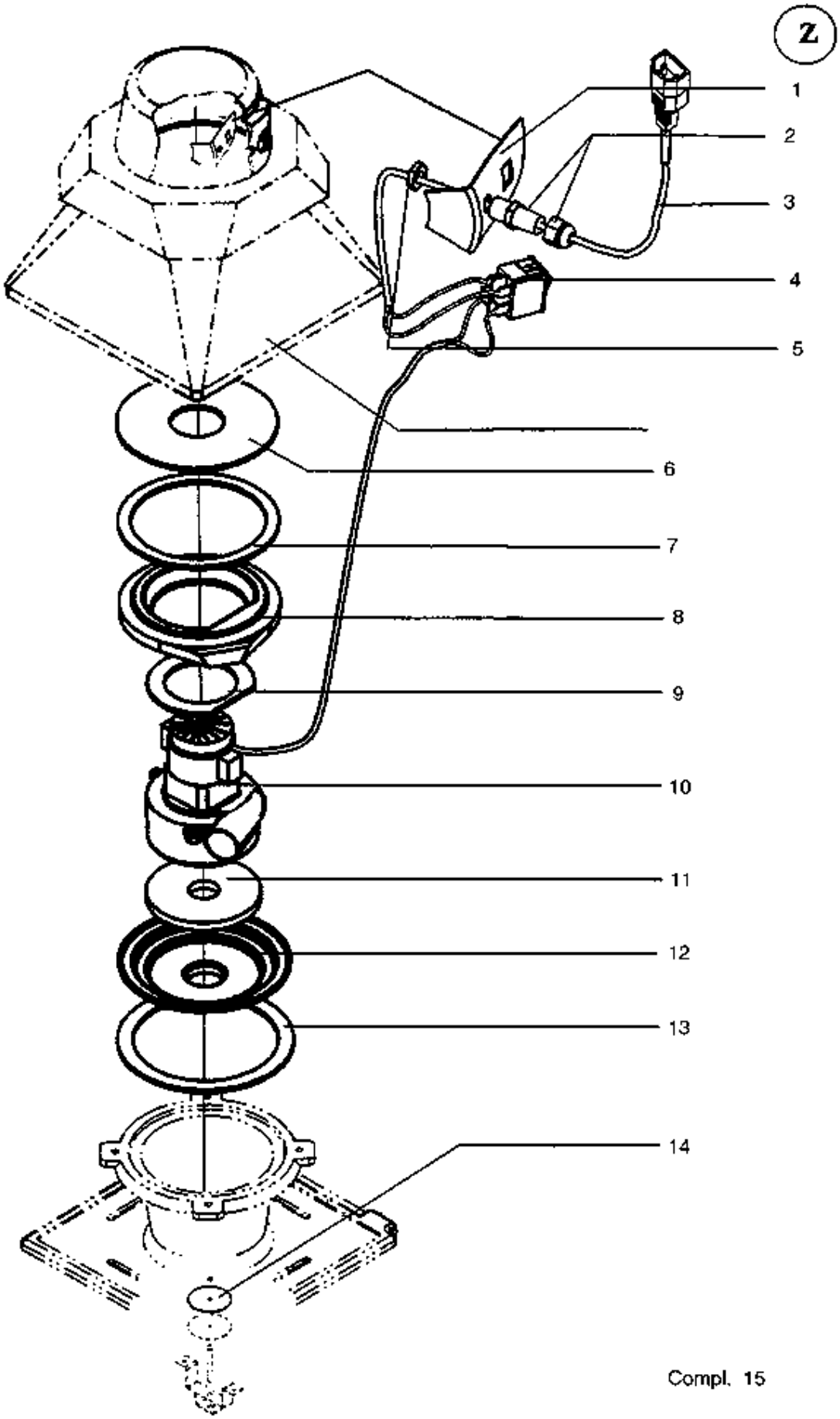
Z
1
2
3
4
5
6
7
8
9
10
11
12
13
14
Compl. 15

SPARE PARTS ACCESSORIES

C 51

09-02-2015

Part List ID DX36113

29

Pos	Part no.	Qty	Description
1	L08602686	1	ANGLE
4	L08602696	1	SWITCH CPL. FISE TURBINE
12	L08602685	1	SUCTION HOLDER LOWER PART
14	L08221000	1	SEALING RING Ø 60X1
15	L08602708	1	MOTOR ASSEMBLY KIT C51

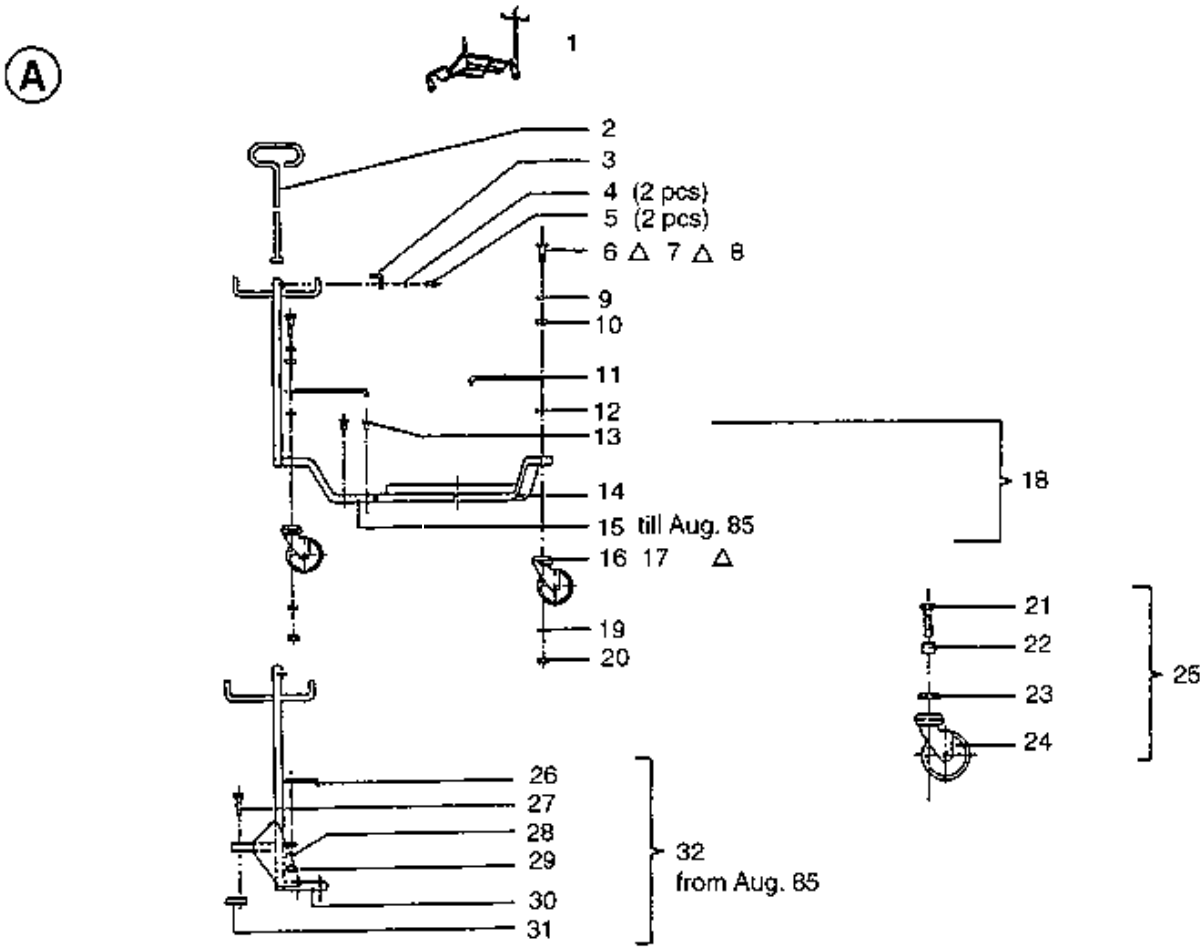

available from May 1986 on
Carrriage complete
33

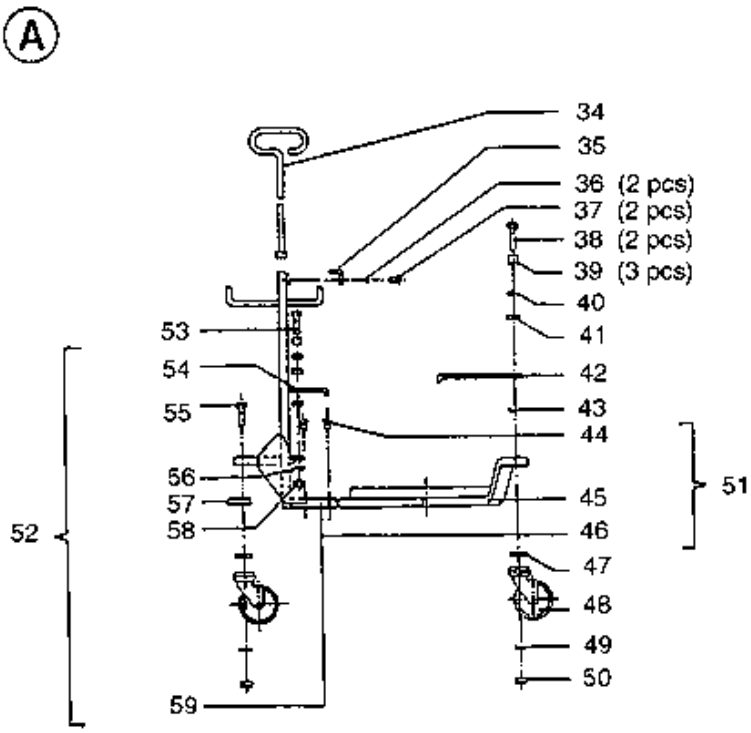

SPARE PARTS ACCESSORIES

C 51

Pos	Part no.	Qty	Description
1	L08238600	1	TROLLEY FOR TOOLS/IMPLEMENTS C51
2	L08238100	1	HANDLE DIA. 9X398
3	L08238200	1	ANGLE STOP FOR TOW BAR
4	L08040400	2	WASHER FLAT 5X10
9	L08238300	1	WASHER 15X25 NYLON UNI6592
11	L08237900	1	ANGLE
12	L08238300	1	WASHER 15X25 NYLON UNI6592
13	L08042500	1	COUNTERSUNK SCREW M8X16
15	L08238600	1	TROLLEY FOR TOOLS/IMPLEMENTS C51
16	L08238400	1	WHEEL FOR CARRIAGE FRAME C51
17	L08297400	1	ROLLER
18	L08238000	1	CARRIER CPL.
19	L08244100	1	PAD C38
20	33005505	1	NUT HEX M10 UNI5588
21	L08315000	1	SCREW M 10X50
24	L08297300	1	WHEEL
25	L08297400	1	ROLLER
27	L08284500	1	SCREW M 10X35 VZ
28	L08244100	1	PAD C38
29	33005505	1	NUT HEX M10 UNI5588
32	L08238600	1	TROLLEY FOR TOOLS/IMPLEMENTS C51
33	L08238600	1	TROLLEY FOR TOOLS/IMPLEMENTS C51
34	L08238100	1	HANDLE DIA. 9X398
35	L08238200	1	ANGLE STOP FOR TOW BAR
36	L08040400	2	WASHER FLAT 5X10
38	L08315000	2	SCREW M 10X50
40	L08238300	1	WASHER 15X25 NYLON UNI6592
42	L08237900	1	ANGLE
43	L08238300	1	WASHER 15X25 NYLON UNI6592
44	L08042500	1	COUNTERSUNK SCREW M8X16
48	L08297300	1	WHEEL
49	L08244100	1	PAD C38
50	33005505	1	NUT HEX M10 UNI5588
51	L08238000	1	CARRIER CPL.
52	L08238600	1	TROLLEY FOR TOOLS/IMPLEMENTS C51
53	L08284500	1	SCREW M 10X35 VZ
55	L08284500	1	SCREW M 10X35 VZ
56	L08244100	1	PAD C38
58	33005505	1	NUT HEX M10 UNI5588

1 DUST FILTER COMPLETE

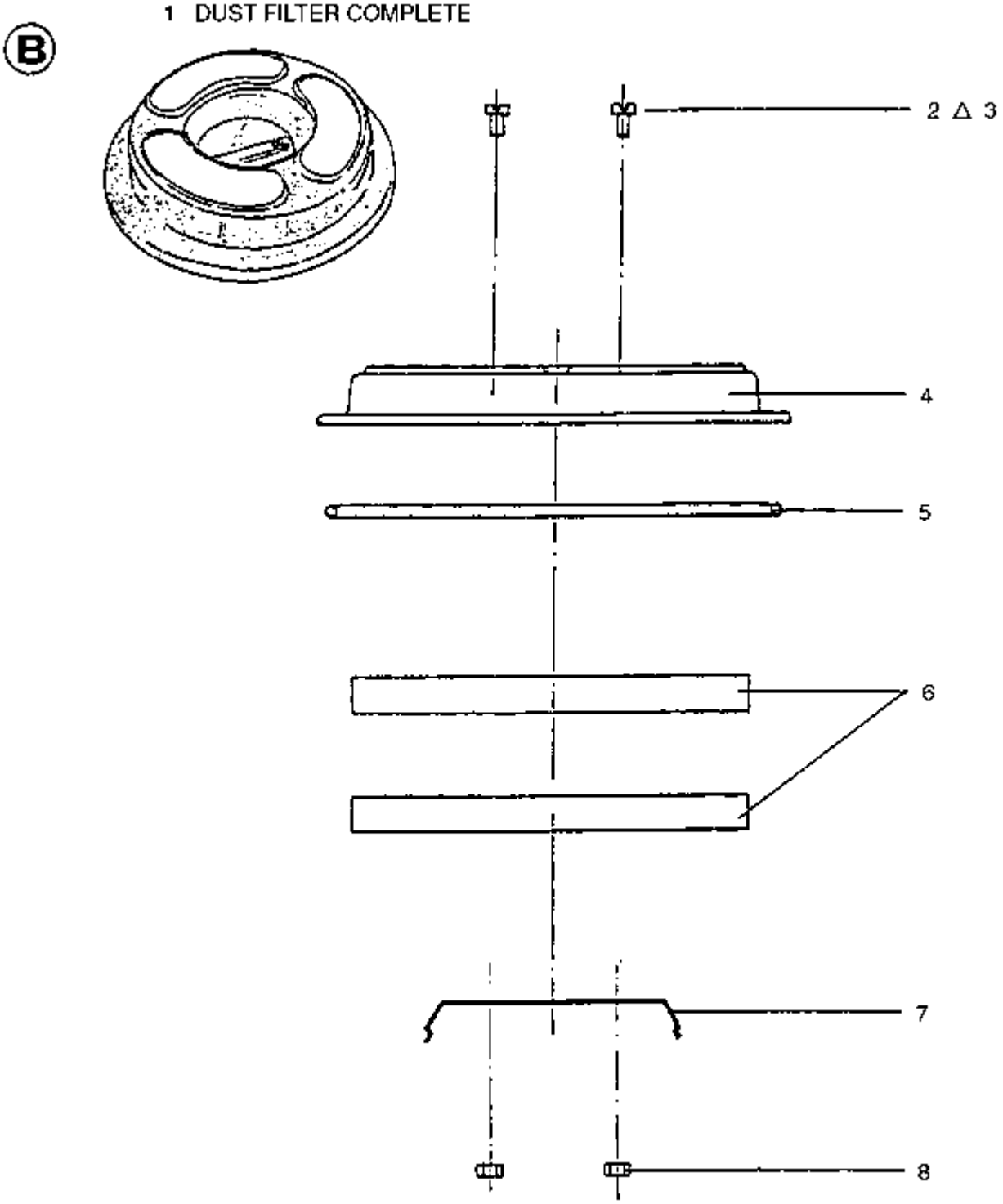

SPARE PARTS ACCESSORIES

C 51

09-02-2015

Part List ID DX36118

33

Pos	Part no.	Qty	Description
1	L08407400	1	FILTER FOR NILFISK C51
2	L08200900	1	SCREW M 4X5
4	L08244800	1	FILTER FRAME
6	L08244900	2	FILTER ELEMENT FOR C51
7	L08245000	1	CLAMP
8	L08200500	1	NUT

Ⓢ

compl. 1

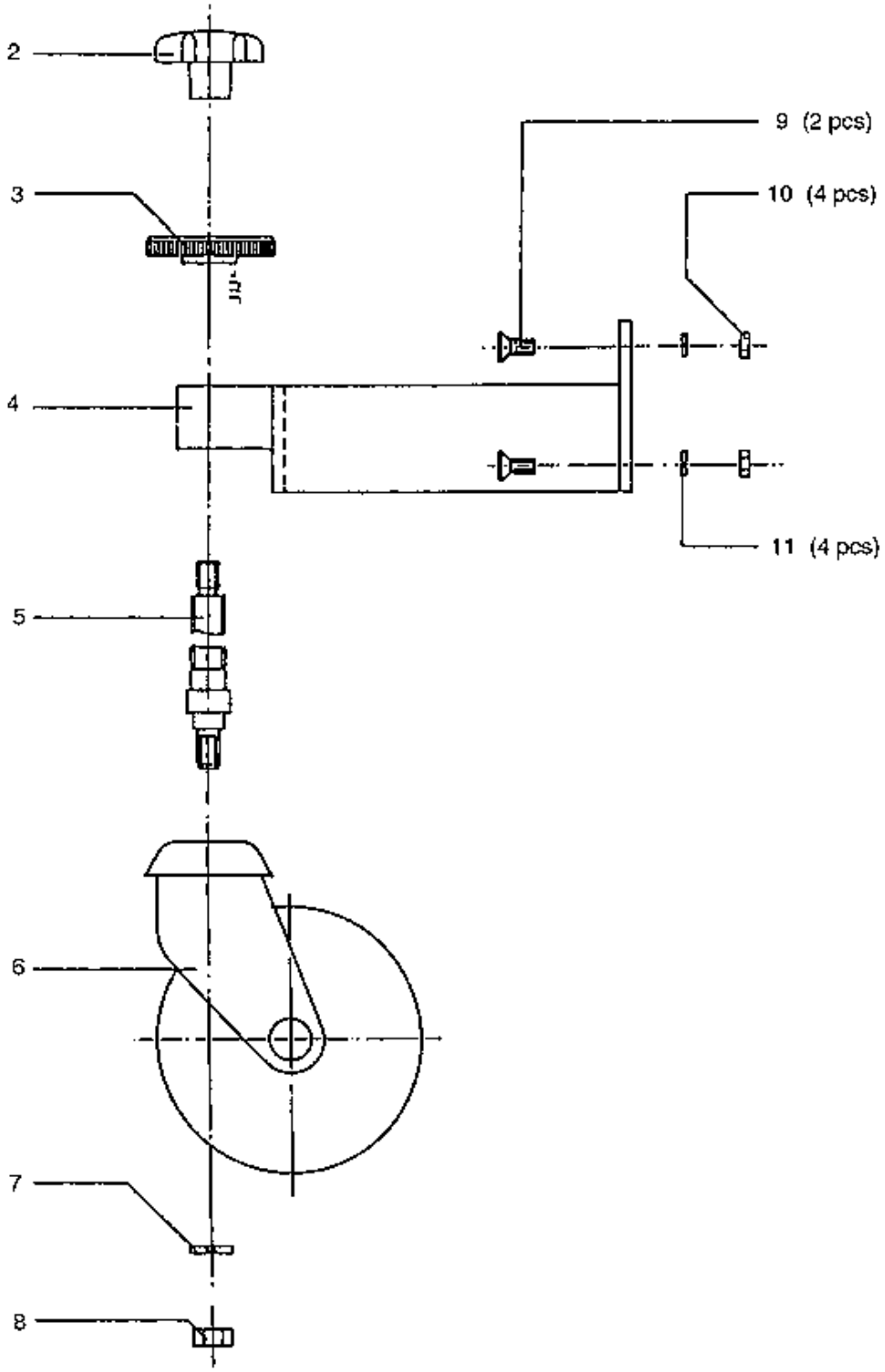

SPARE PARTS ACCESSORIES

C 51

09-02-2015

Part List ID DX36119

35

Pos	Part no.	Qty	Description
1	L08407500	1	WHEEL C 51
2	L08246000	1	SCREW
3	L08245900	1	NUT M16
5	L08271100	1	BOLT
6	L08222100	1	CASTER WHEEL
7	L08244100	1	PAD C38
8	33005505	1	NUT HEX M10 UNI5588
9	L08035400	2	COUNTERSUNK SCREW M6X16
10	33005502	4	NUT HEX M6 UNI5588
11	L08035800	4	PAD C38