SSB 400W

Model:
SSB 400



Part List US-English

05-02-2015

Nilfisk ALTO
works for you

www.nilfisk-alto.com

Table of Contents

SSB 400W

Cabinet, Tank	**3**
Chassis	**5**
Battery. Wheels	**7**
Squeegee. Spray nozzles	**9**
Squeegee blades	**11**
Motor	**13**
Pump. Hoses =>15.02.1998	**15**
Pump. Hoses 16.02.1998=>	**17**
Pump 16.02.1998 =>	**19**
Brush motor. Brush roller	**21**
Handle	**23**

Cabinet, Tank

SSB 400W

05-02-2015

Part List ID SSB400W01

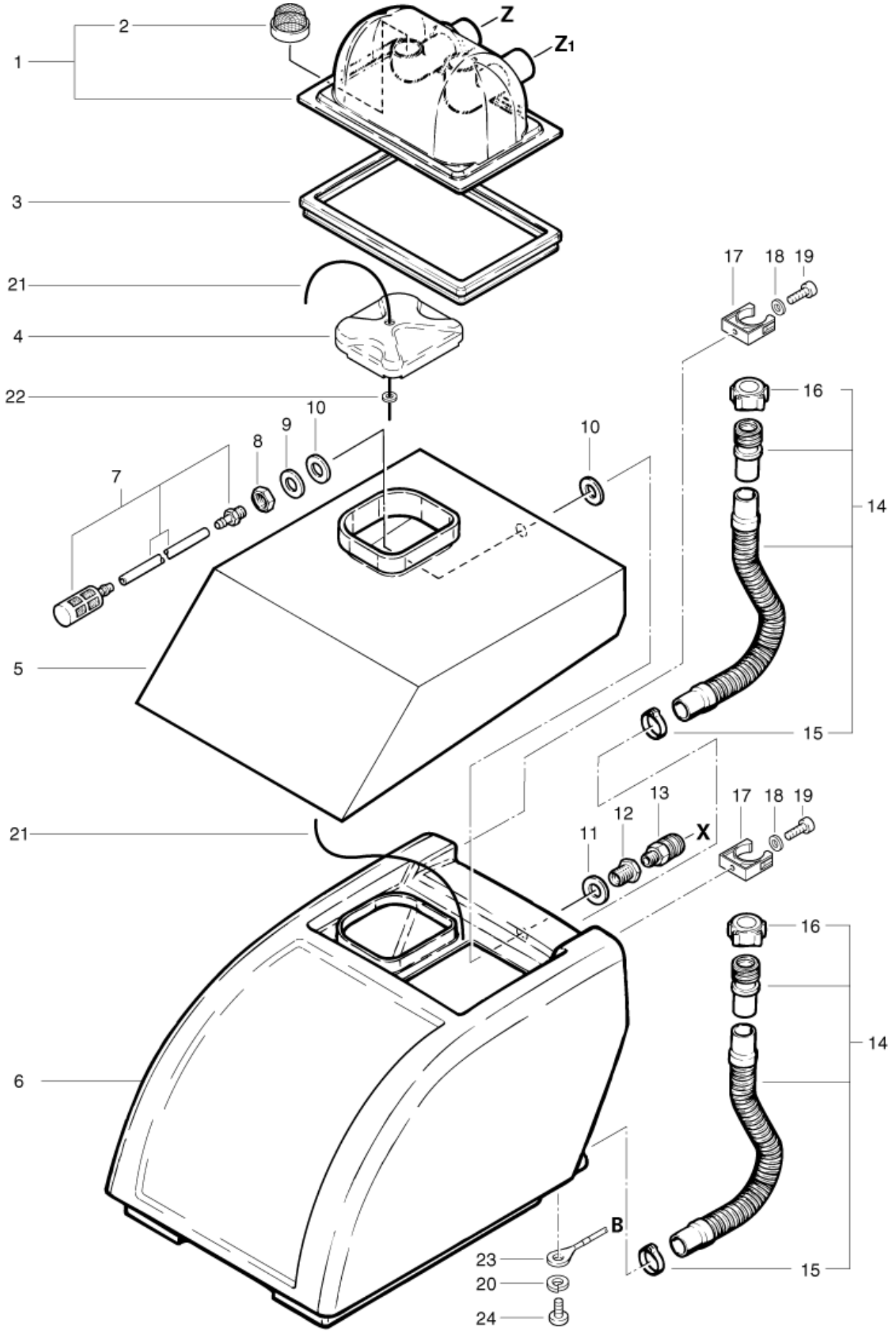

Cabinet, Tank

SSB 400W

05-02-2015

Part List ID SSB400W01

4

Pos	Part no.	Qty	Description
1	48530	1	COVER
2	44922	1	FILTER
3	48528	1	MOULDED GASKET
4	63266	1	COVER
5	28514	1	TANK
6	67045	1	TANK SSB 400/480. BLUE
7	28517	1	SUCTION HOSE
8	7393	1	HEXAGON NUT R3/8X5
9	28134	1	WASHER 35.0X24.0X1.5
10	28133	2	WASHER
11	7279	1	PACKING RING D17X2XD32
12	15629	1	NIPPLE
13	7354	1	COUPLING 1/4
14	28351	2	HOSE
15	31001	2	HOSE CLIP D32-50
16	40041	2	COVER
17	7286	2	RETAINING CLAMP
18	15498	2	SCREW 5.3X1.0 A 125
19	9795	2	CYLINDER SCREW M5X12 ISO 4762 ST 8.8/ZN
20	24312	1	SPRING WASHER A6 DIN 127
21	303000507	1	CORD D3X470 SSB 400W/48
22	3092	1	WASHER 4.3x0.8 ISO 7089 zn
23	28139	1	ROPE D3X530
24	2711	1	PAN HEAD SCREW M6X8 DIN 923 ZN

Chassis

SSB 400W

05-02-2015

Part List ID SSB400W02

5

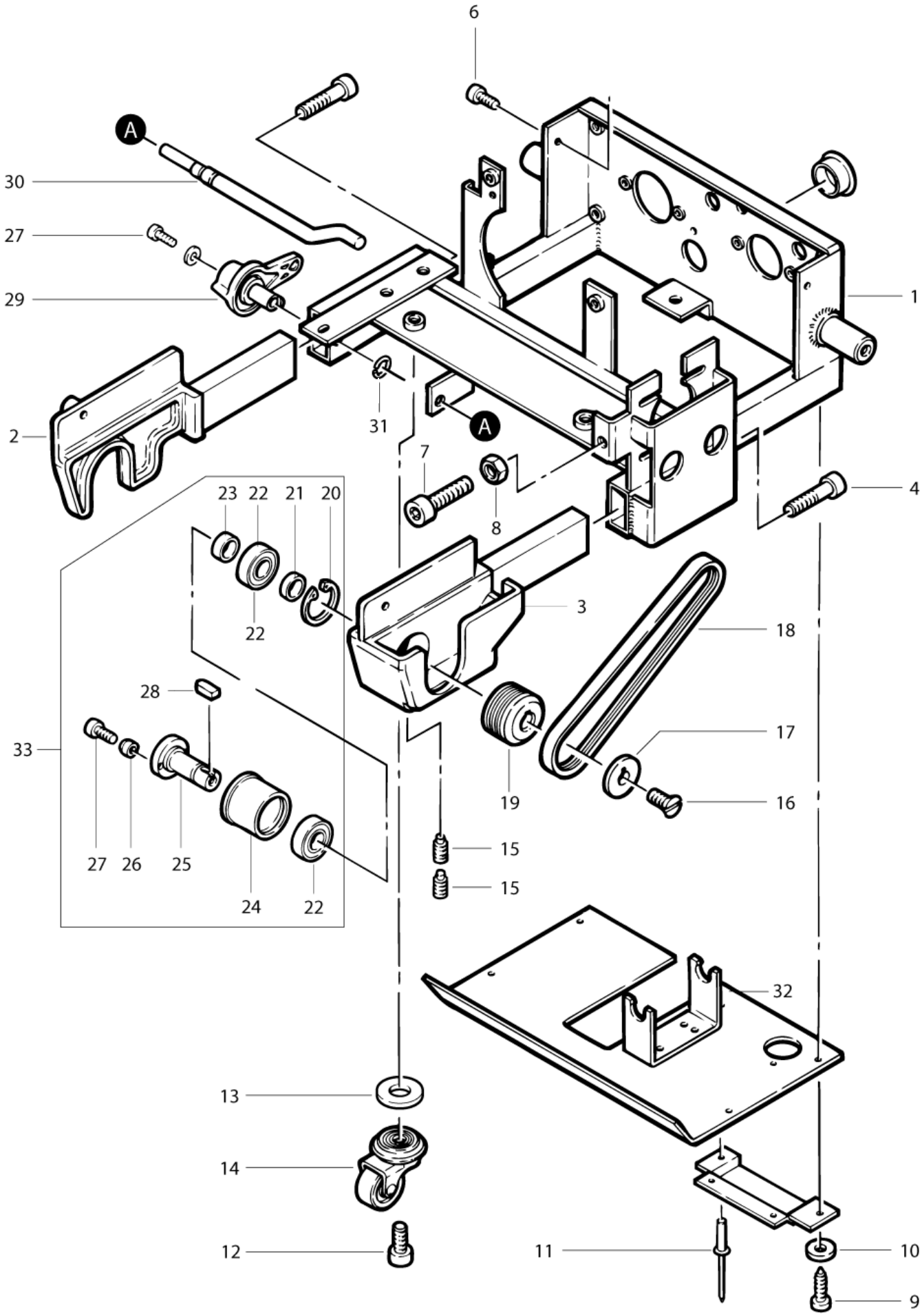

Chassis

SSB 400W

05-02-2015

Part List ID SSB400W02

6

Pos	Part no.	Qty	Description
1	61786	1	RUNNING GEAR SSE 400 W
2	61787	1	RETAINING RAIL
3	44994	1	RETAINING RAIL LEFT
4	5945	2	SCREW M6X30
6	1801018	2	CYLINDER SCREW M4X8 ISO 4762 ST 8.8/ZN
7	8895	1	Zylinderschraube M8x 25 ISO4762 VA
8	2758	1	HEXAGON NUT M8
9	12189	4	TREAD-CUTTING SCREW M2.2X9.5 CH ISO 7049
10	42822	4	SCREW 3.2X0.5 A 125
11	11691	2	BLIND RIVET 4X10X8
12	34220	2	CYLINDER SCREW M10X25 ISO 4762 ZN
14	61789	2	GUIDE ROLLER
15	9921027	2	POINTED SCREW
16	5187	1	COUNTERSUNK HEAD SCREW M6X12 ISO 7047 ZN
17	44949	1	WASHER 6X2.8
18	25720	1	DRIVE BELT
19	44948	1	BELT-SHB D42-6 AL
20	44943	1	RING
21	44942	1	RING
22	44940	2	BEARING
23	44941	1	RING
24	44944	1	BEARING BUSHING
25	44947	1	SHAFT
26	44945	1	RING
27	1801018	1	CYLINDER SCREW M4X8 ISO 4762 ST 8.8/ZN
28	44946	1	PARALLEL KEY
29	61784	1	HEBEL -FIXING KNOB
30	61790	1	PIPE FOR SSE 400W
31	14402	1	LOCK WASHER Ø6 DIN 6799 ST
32	7386	1	RETAINING STIRRUP. ALUMIN
33	31000451	1	DRIVE SHAFT KIT

Battery. Wheels

SSB 400W

05-02-2015

Part List ID SSB400W03

7

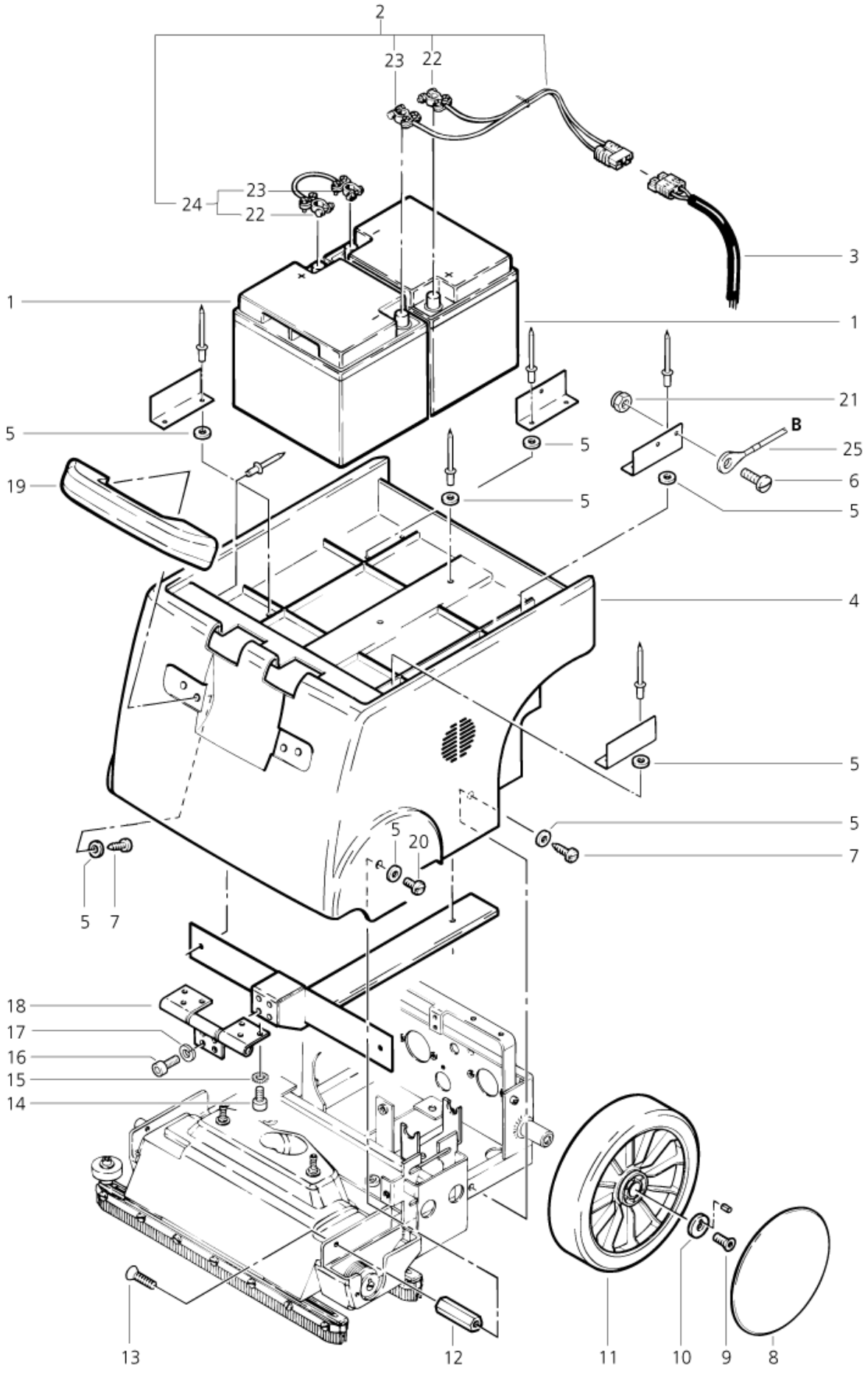

Battery. Wheels

SSB 400W

05-02-2015

Part List ID SSB400W03

8

Pos	Part no.	Qty	Description
1	48903	1	BATTERY SET - 2 PCS. 12 V
2	28136	1	BATTERY CABLE LONG
3	25713	1	MOTOR CABLE CONNECTION
5	2763	16	WASHER 5.3X1
6	3349	1	SCREW M5X16
7	11565	6	SCREW 5X18 WN1411
8	67047	2	WHEEL CAP D180
9	31352	2	COUNTERSUNK SCREW M6X10 D
10	44949	2	WASHER 6X2.8
11	61782	2	WHEEL 230
12	61791	1	SPACER PIECE
13	6200	1	COUNTERSUNK SCREW M5X10 ISO H 7046 VA
14	4820	6	SCREW M5X10
15	3376	6	SERRATED LOCK WASHER D5.3 A2 DIN 6798A
16	2780	4	CYLINDER SCREW M6X12 ISO 1207 ZN
17	2772	4	LOCK WASHER 6
19	43191	1	BOW-TYPE HANDLE BK 800 KU
20	34214	2	PAN HEAD SCREW M5X12 DIN8
21	24562	1	HEXAGON THIN NUT
22	34489	2	BATTERY TERMINAL PLUS RIG
23	34490	2	BATTERY TERMINAL MINUS LE
24	27041	1	BATTERY CABLE SHORT
25	28139	1	ROPE D3X530

Squeegee. Spray nozzles

SSB 400W

05-02-2015

Part List ID SSB400W04

9

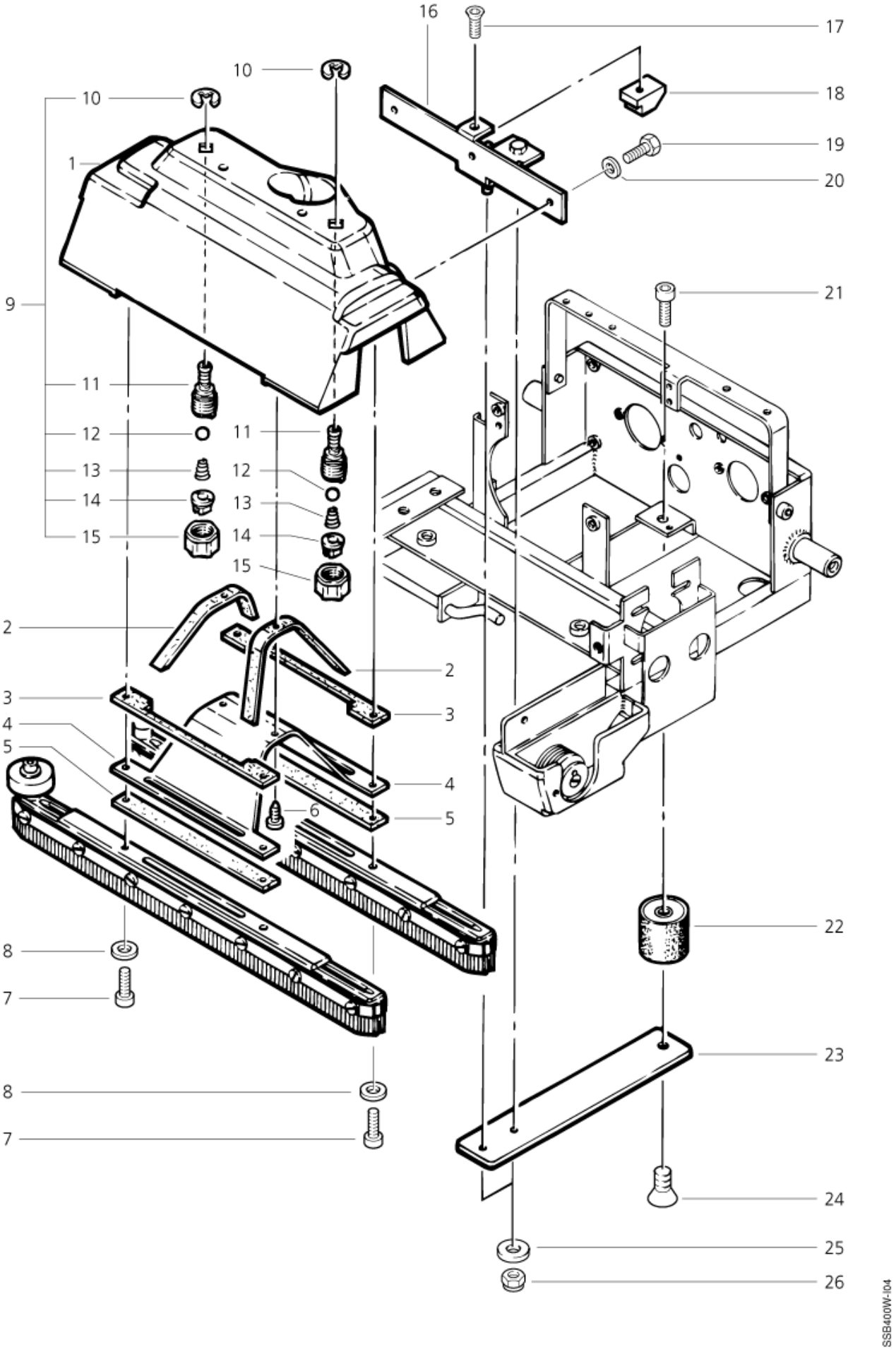

Squeegee. Spray nozzles

SSB 400W

05-02-2015

Part List ID SSB400W04

10

Pos	Part no.	Qty	Description
1	44995	1	COVER 450X50X150
2	45009	2	GASKET 200 X 10 X 3
3	45010	2	GASKET 190 X 18 X 3
4	45012	1	PLATE PROFILE
5	44933	2	GASKET 190 X 18 X 3
6	57069	2	LENS HEAD COUNTERS. SCREW
7	24316	4	Zylinderschraube M5x 16 ISO4762 A2
8	2763	4	WASHER 5.3X1
9	45013	2	SPRAY NOZZLE CPL.
10	34480	2	RETAINING WASHER D9 A2
11	34479	2	NOZZLE HOLDER - TW 300S
12	34478	2	BALL
13	34477	2	SPRING
14	45007	2	SINGLE NOZZLE
15	7365	2	CAP NUT R3/8
16	61785	1	NOZZLE HOLDER 230X55X70
17	19527	1	COUNTERSUNK SCREW M4X10 ISO 7046 ZN
18	61812	1	UNTERLAGE 40X30X30 SSE/
20	3376	2	SERRATED LOCK WASHER D5.3 A2 DIN 6798A
21	8891	1	HEXAGON SOCKET HEAD CAP S
22	28135	1	BUFFER
23	61813	1	SUPPORT FRAME
24	8942	1	COUNTERSUNK SCREW M8X16 ISO 7046 ZN
25	5166	2	WASHER 5.3X1.6
26	24562	2	HEXAGON THIN NUT

Squeegee blades

SSB 400W

05-02-2015

Part List ID SSB400W05

11

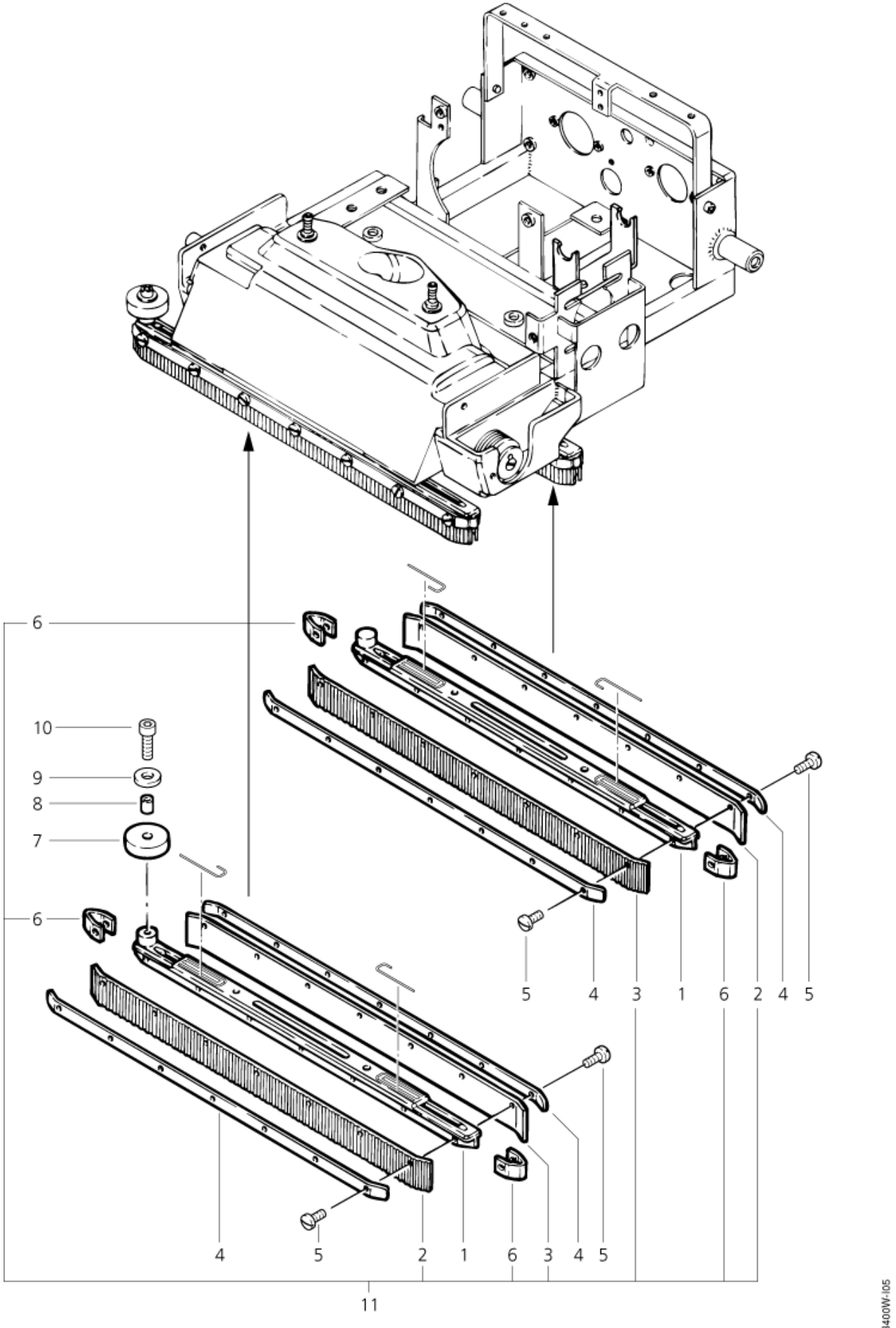

Squeegee blades

SSB 400W

05-02-2015

Part List ID SSB400W05

12

Pos	Part no.	Qty	Description
1	45000	2	BAR
2	45011	2	SQUEEGEE SYSTEM
3	45011	2	SQUEEGEE SYSTEM
4	44999	4	RETAINING RAIL
5	44998	28	SCREW FL-KPF- M 4X 10
6	45002	4	END CAP
7	44997	1	ROLL
8	44996	1	FEMALE FITTING
9	5166	1	WASHER 5.3X1.6
10	8915	1	HEX. SCREW M5X20 ISO 4017 ZN
11	45011	1	SQUEEGEE SYSTEM

Motor

SSB 400W

05-02-2015

Part List ID SSB400W06

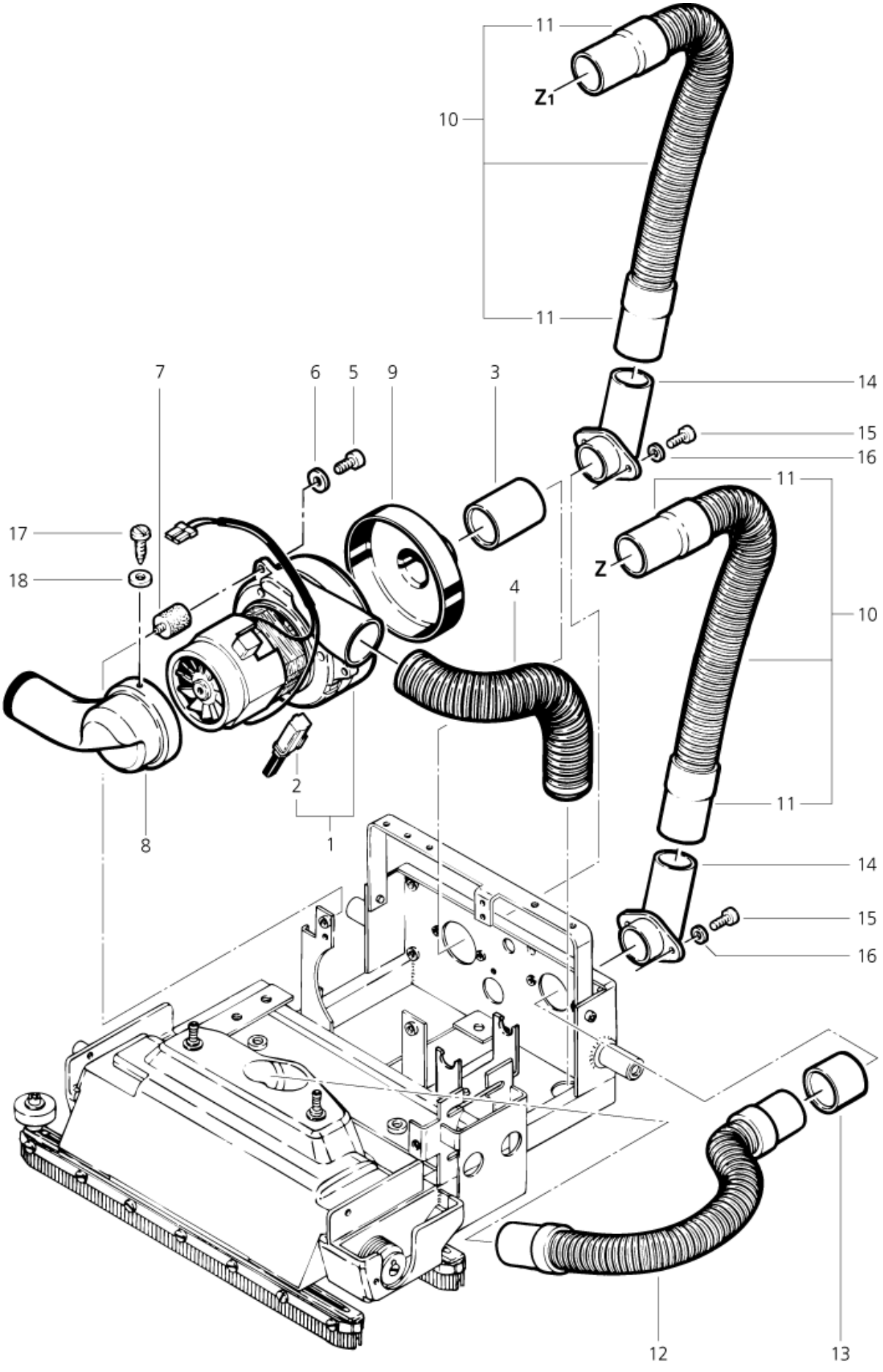

Motor

SSB 400W

05-02-2015

Part List ID SSB400W06

Pos	Part no.	Qty	Description	
1	25726	1	MOTOR 400W/24V	
2	25727	1	CARBON BRUSH SET	=>31.12.2002|
2	303000380	1	CARBON BRUSH SET	|01.01.2003=>
3	45032	1	HOSE	
4	25728	1	HOSE	
5	24355	2	SCREW M6X16	
6	2764	2	WASHER 6.4X1.6	
7	25729	2	PUFFER D20 X 30 M6	
8	25730	1	COOLING-AIR-CONDUIT RA400	
9	7295	1	HOSE CONNECTION CAP	
10	28376	2	SUCTION HOSE	
11	45028	4	END COVER	
12	25732	1	SUCTION HOSE	
13	25733	1	SLEEVE	
14	49447	2	SUPPORT - SSE/B 400	
15	9768	4	CYLINDER SCREW M4X12 ISO 4762 ST 8.8/ZN	
16	24353	4	WASHER 4.3X1	

Pump. Hoses =>15.02.1998

SSB 400W

05-02-2015

Part List ID SSB400W07

15

=> 15.02.1998

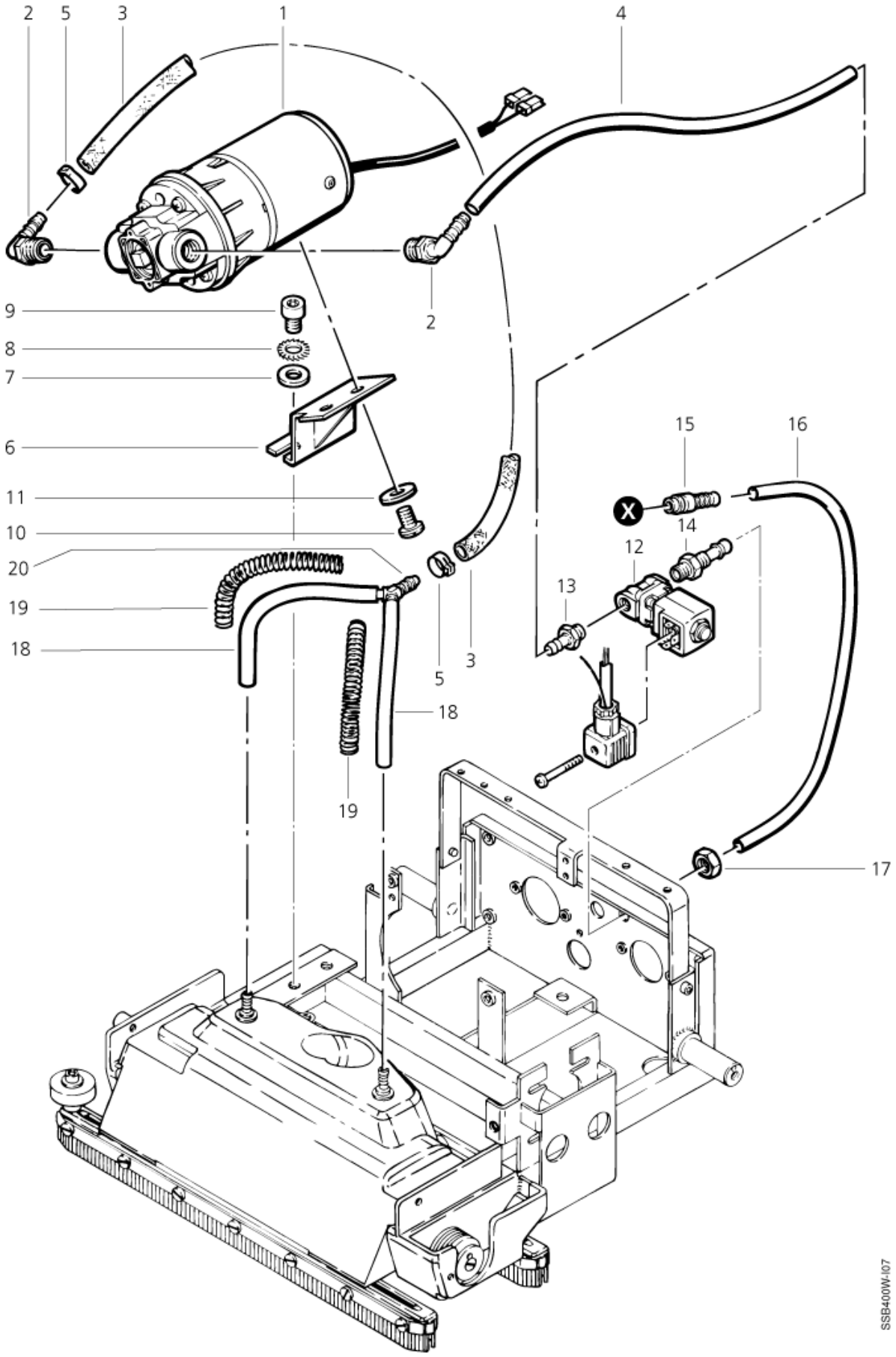

Pump. Hoses =>15.02.1998

SSB 400W

05-02-2015

Part List ID SSB400W07

16

Pos	Part no.	Qty	Description	
1	49920	1	PUMP 24 V	=>15.02.1998|
2	25745	2	HOSE NOZZLE D6 G3/8 90	=>15.02.1998|
3	28054	1	HOSE	=>15.02.1998|
4	28377	1	HOSE D6X1X330	=>15.02.1998|
5	7275	2	HOSE CLIP	=>15.02.1998|
7	2762	2	WASHER 8.4X1.6	=>15.02.1998|
8	2803	2	WASHER A 8.2 DIN6797 ZN FORM J	=>15.02.1998|
10	55739	2	SCREW M5X10 DIN 7500	=>15.02.1998|
11	5166	2	WASHER 5.3X1.6	=>15.02.1998|
12	49705	1	MAGNETIC VALVE 24V	=>15.02.1998|
13	25750	1	COUPLING	=>15.02.1998|
14	25750	1	COUPLING	=>15.02.1998|
15	25751	1	NIPPLE	=>15.02.1998|
16	28516	1	SUCTION HOSE	=>15.02.1998|
18	45016	2	HOSE	=>15.02.1998|
19	45019	2	SPRING	=>15.02.1998|
20	2399	1	HOSE LINER	=>15.02.1998|

Pump. Hoses 16.02.1998=>

SSB 400W

05-02-2015

Part List ID SSB400W08

17

16.02.1998 =>

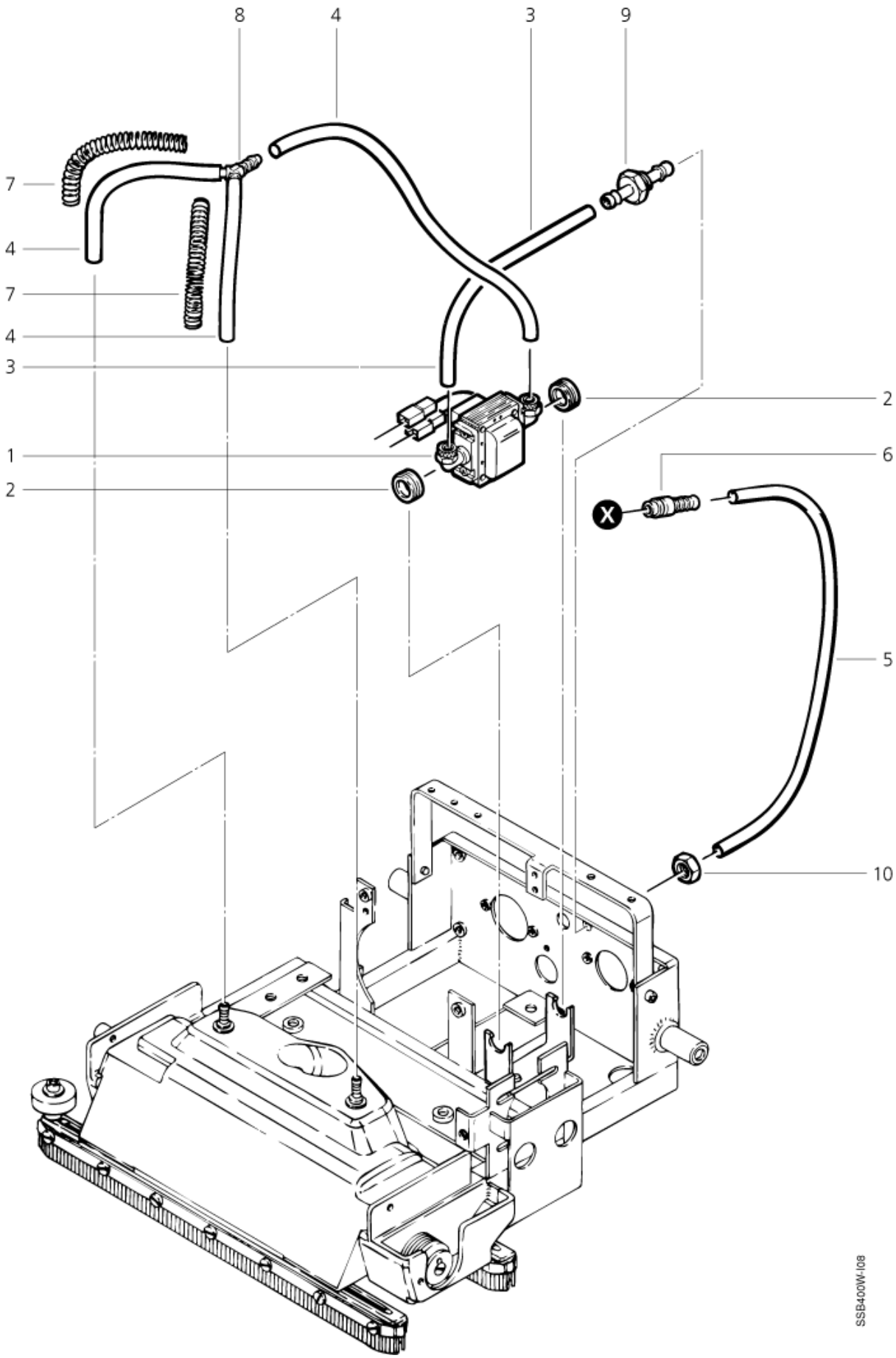

Pump. Hoses 16.02.1998=>

SSB 400W

05-02-2015

Part List ID SSB400W08

Pos	Part no.	Qty	Description	
1	62822	1	WATER SPRAY PUMP	|16.02.1998=>
2	7385	2	RETAINING RING	|16.02.1998=>
3	45016	1	HOSE	|16.02.1998=>
4	28377	3	HOSE D6X1X330	|16.02.1998=>
5	28516	1	SUCTION HOSE	|16.02.1998=>
6	25751	1	NIPPLE	|16.02.1998=>
7	45019	2	SPRING	|16.02.1998=>
8	2399	1	HOSE LINER	|16.02.1998=>
9	45020	1	HOSE NOZZLE	|16.02.1998=>

Pump 16.02.1998 =>

SSB 400W

05-02-2015

Part List ID SSB400W09

16.02.1998 =>

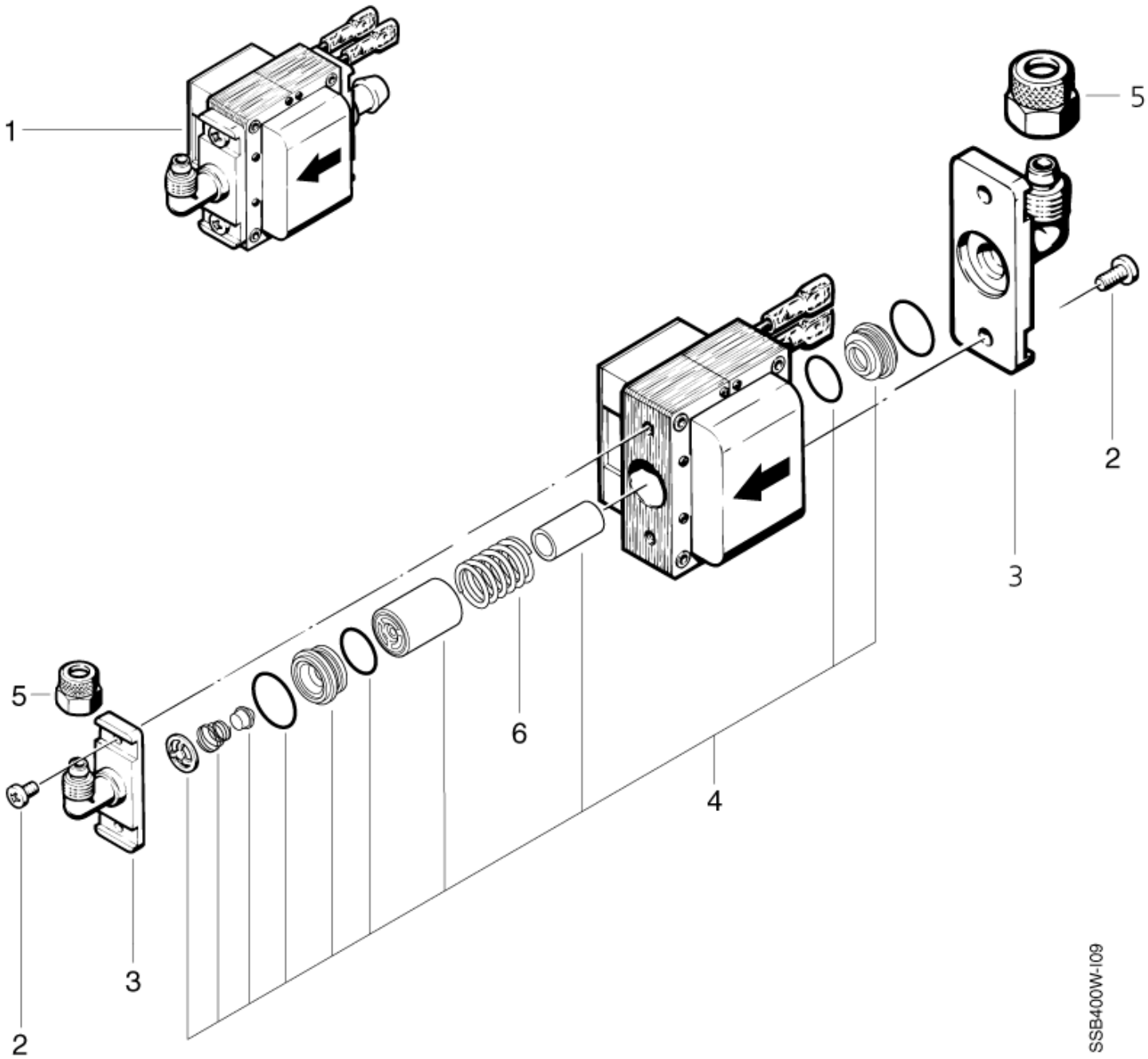

Pump 16.02.1998 =>

SSB 400W

05-02-2015

Part List ID SSB400W09

20

Pos	Part no.	Qty	Description	
1	62822	1	WATER SPRAY PUMP	|16.02.1998=>
2	27138	4	LENS HEAD COUNTERS. SCREW	|16.02.1998=>
3	45021	2	CONNECTING FLANGE	|16.02.1998=>
4	34049	1	REPAIR KIT	|16.02.1998=>
5	45023	2	NUT	|16.02.1998=>
6	909100089	1	SPRING 1.7X14.6X20	|16.02.1998=>

Brush motor. Brush roller

SSB 400W

05-02-2015

Part List ID SSB400W10

21

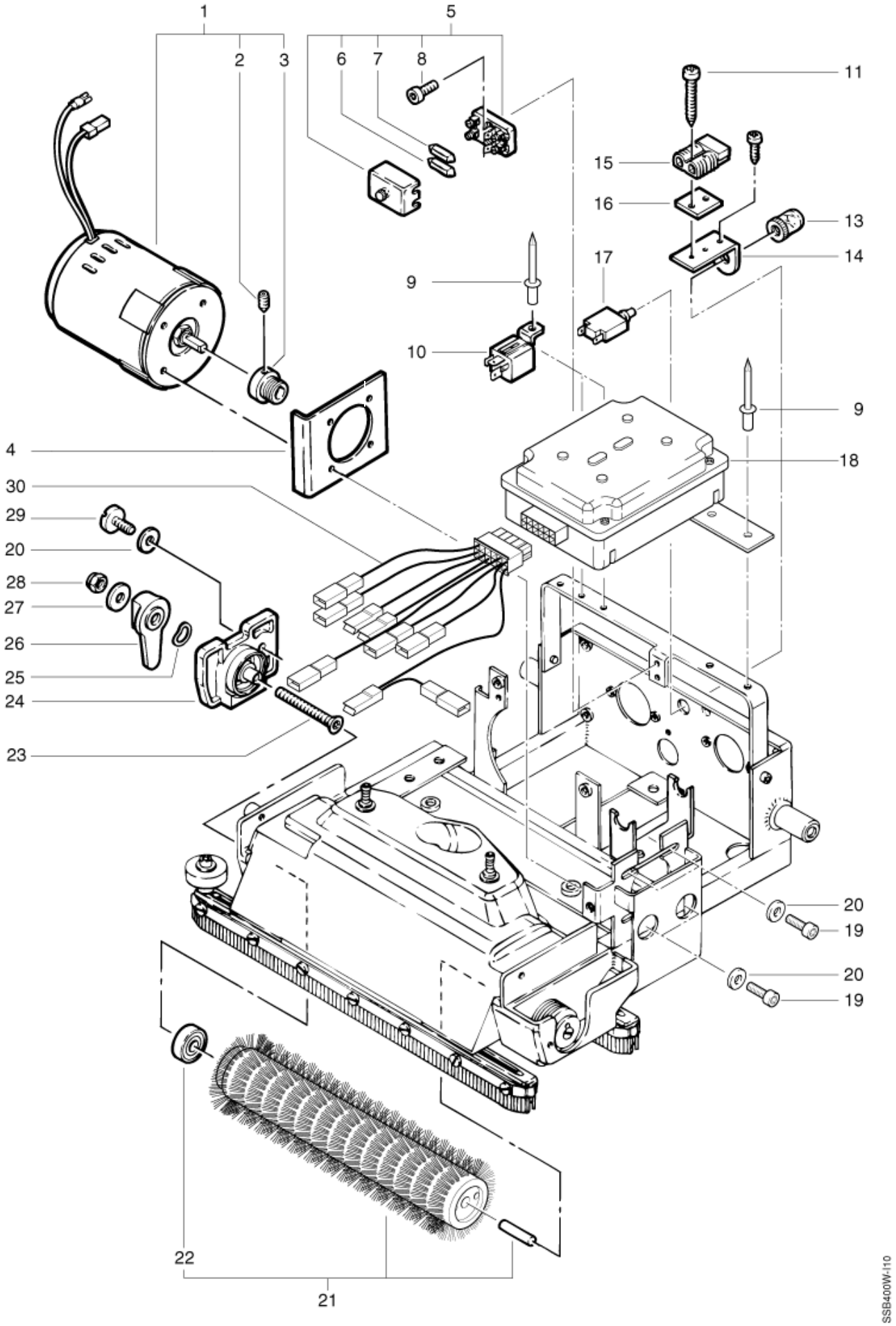

Brush motor. Brush roller

SSB 400W

05-02-2015

Part List ID SSB400W10

22

Pos	Part no.	Qty	Description	
1	25735	1	BRUSH MOTOR	=>02.05.1999|
1	303000417	1	MOTOR 0.25KW 24V DC 1400U	|03.05.1999=>
2	9921027	1	POINTED SCREW	
3	25737	1	STRAP DISC	=>02.05.1999|
3	303001002	1	PULLEY D28	|03.05.1999=>
5	40048	1	FUSE BOX	
6	40046	1	FUSE	
7	40047	1	FUSE	
8	3482	2	SCREW M4X16	
9	7063	4	BLIND RIVET 4.8X10X9.5 A ALU/ST	
10	40053	2	RELAY 24V	
13	25741	1	COVER	
15	28949	1	PLUG	
17	303000515	1	CIRCUIT BREAKER 12.0A S	
18	303000219	1	CONTROL BOX	=>15.02.1998|
18	63264	1	PC BOARD	|16.02.1998=>
19	32535	3	SCREW M5X16	
20	5166	4	WASHER 5.3X1.6	
21	44934	1	ROLLER BRUSH STANDARD - S	
22	44938	1	BEARING	
23	11257	1	LENFOR FLUSH SCREW 6 X 90	
24	25736	1	BRUSH HOLDER	
25	45040	1	WASHER	
26	44935	1	SUPPORT RA400	
27	2766	1	WASHER 6.4X1.6	
28	33158	1	LOCK NUT M6 A2 DIN 985	
30	303000264	1	CABLE 9-CORE WITH PLUG S	|16.02.1998=>

Handle

SSB 400W

05-02-2015

Part List ID SSB400W11

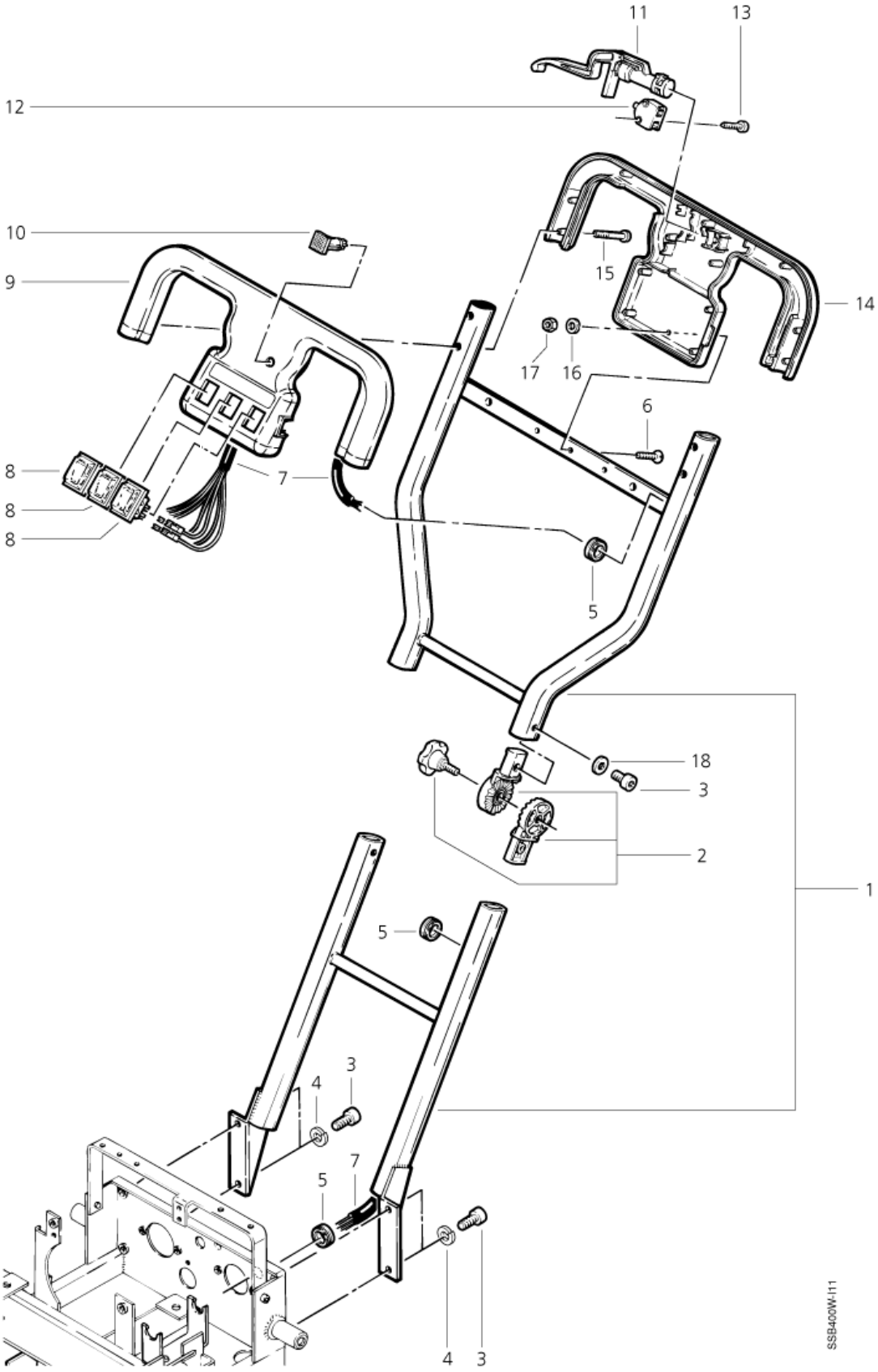

Handle

SSB 400W

05-02-2015

Part List ID SSB400W11

24

Pos	Part no.	Qty	Description	
1	25742	1	SHACKLE	
2	54953	2	PIVOT JOINT	
3	3913	8	SCREW M6X12	
4	2772	4	LOCK WASHER 6	
5	7255	3	INSERT RING	
6	3480	1	COUNTERSUNK SCREW	
7	63263	1	CABLE HARNESS PUSH YOKE	|16.02.1998=>
8	7479	3	SWITCH 24V	
9	45047	1	HANDLE RECESS	
10	28132	1	INDICATOR LAMP - RED 24	
11	45049	1	LEVER	
12	45046	1	SWITCH	
13	45045	2	SCREW EJOT- KA30X20 WN	
14	45048	1	HANDLE RECESS	
16	24353	1	WASHER 4.3X1	
17	2759	1	HEXAGON NUT M4	
18	2766	4	WASHER 6.4X1.6	