SP 300

Model:
SP300



Part List US-English

18-02-2015

Nilfisk ALTO
works for you

www.nilfisk-alto.com

Table of Contents

SP 300

Machine body	**3**
Central tie rod and handle	**5**
Tie rod support	**7**
Tank	**9**

Machine body

SP 300

18-02-2015

Part List ID SP30002

3

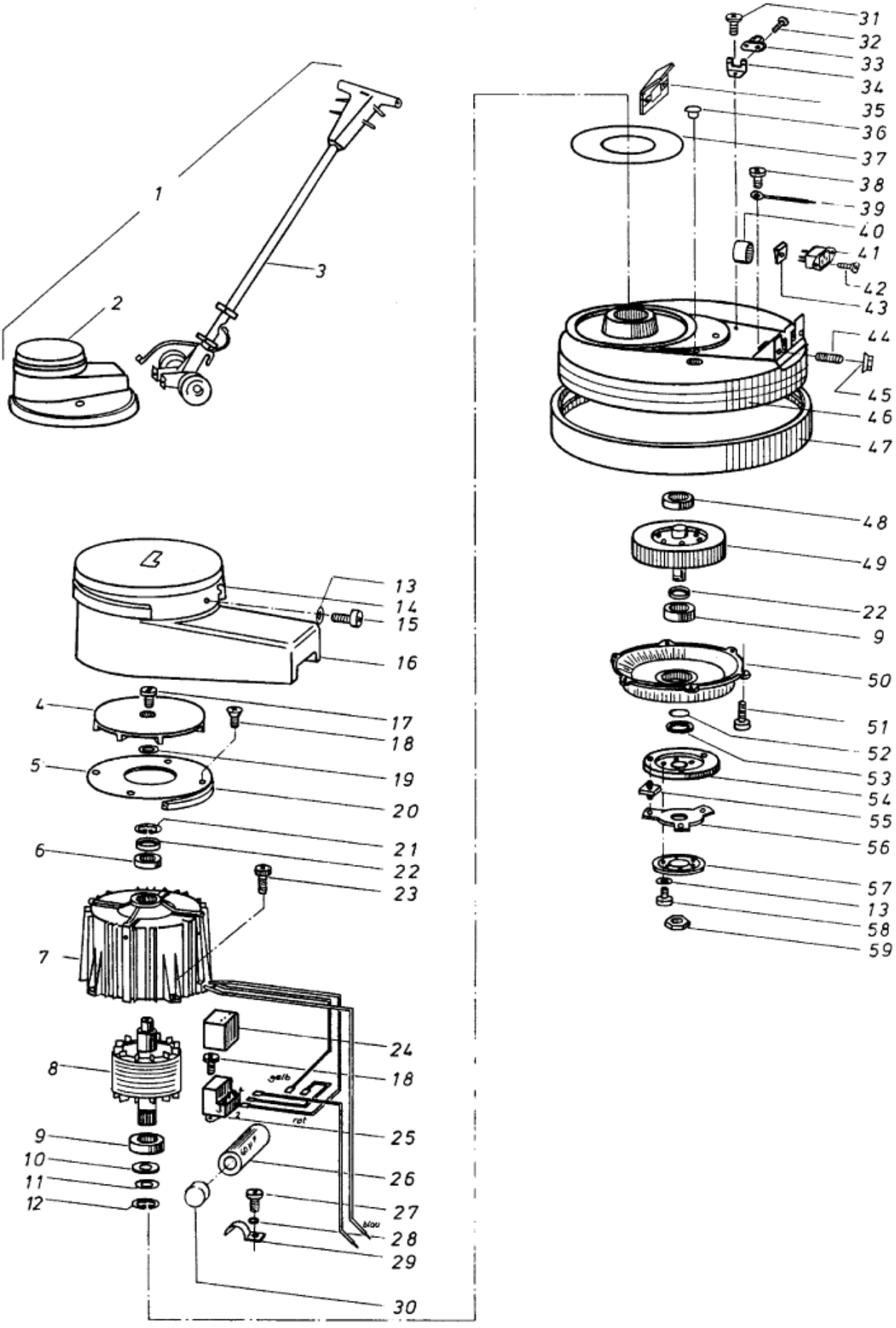

ab Masch. Nr. 1001

Machine body

SP 300

18-02-2015

Part List ID SP30002

4

Pos	Part no.	Qty	Description
4	27254	1	FAN
5	27115	1	WASHER
6	20938	1	BEARING WAS 2809
7	27666	1	MOTOR FRAME
8	27626	1	ROTOR
9	32523	1	ROLLER BEARING 6004-2Z
12	1802057	1	CIRCLIP EXTERNAL 20X1.2 STEEL. DIN 471
13	3376	5	SERRATED LOCK WASHER D5.3 A2 DIN 6798A
15	5189	1	PAN HEAD SCREW M5X10 H ISO 7045 ZN
16	27246	1	PROTECTION CAP
17	14664	1	RAISED DOME HEAD SCREW M6X12 DIN 7985 A2
18	3288	4	SCREW M4X8
19	27145	1	SHIM RING AND SUPPORTING
20	27245	1	RUBBER RING
21	27215	1	CIRCLIP FOR BORES
22	27132	1	BEARING
23	3349	1	SCREW M5X16
25	27691	1	RELAY
26	27694	1	STARTING CAPACITOR 60 MICRONF
27	3348	1	SCREW M5X10
28	15498	1	SCREW 5.3X1.0 A 125
31	2782	1	CYLINDER SCREW M5X8 ISO 1207 ZN
32	4263	1	CYLINDER SCREW M3X16 ISO 1207 ZN
35	27545	1	COVER
38	4144	1	CYLINDER SCREW M4X6 ISO 1207 ZN
41	27563	1	SWITCH 6061.5
45	1800515	1	Lock Nut M8 - 8 A2K DIN 985
48	2808	1	ANTI-FRICTION BEARING 620
53	27233	1	DISTANCE SP 300
54	27227	1	WASHER
55	27228	3	BOLT
56	27208	1	SEGMENTAL SECTIONAL WHEEL
58	5189	4	PAN HEAD SCREW M5X10 H ISO 7045 ZN
59	19727	1	HEXAGON NUT M14X1 DIN 934

Central tie rod and handle

SP 300

18-02-2015

Part List ID SP30004

5

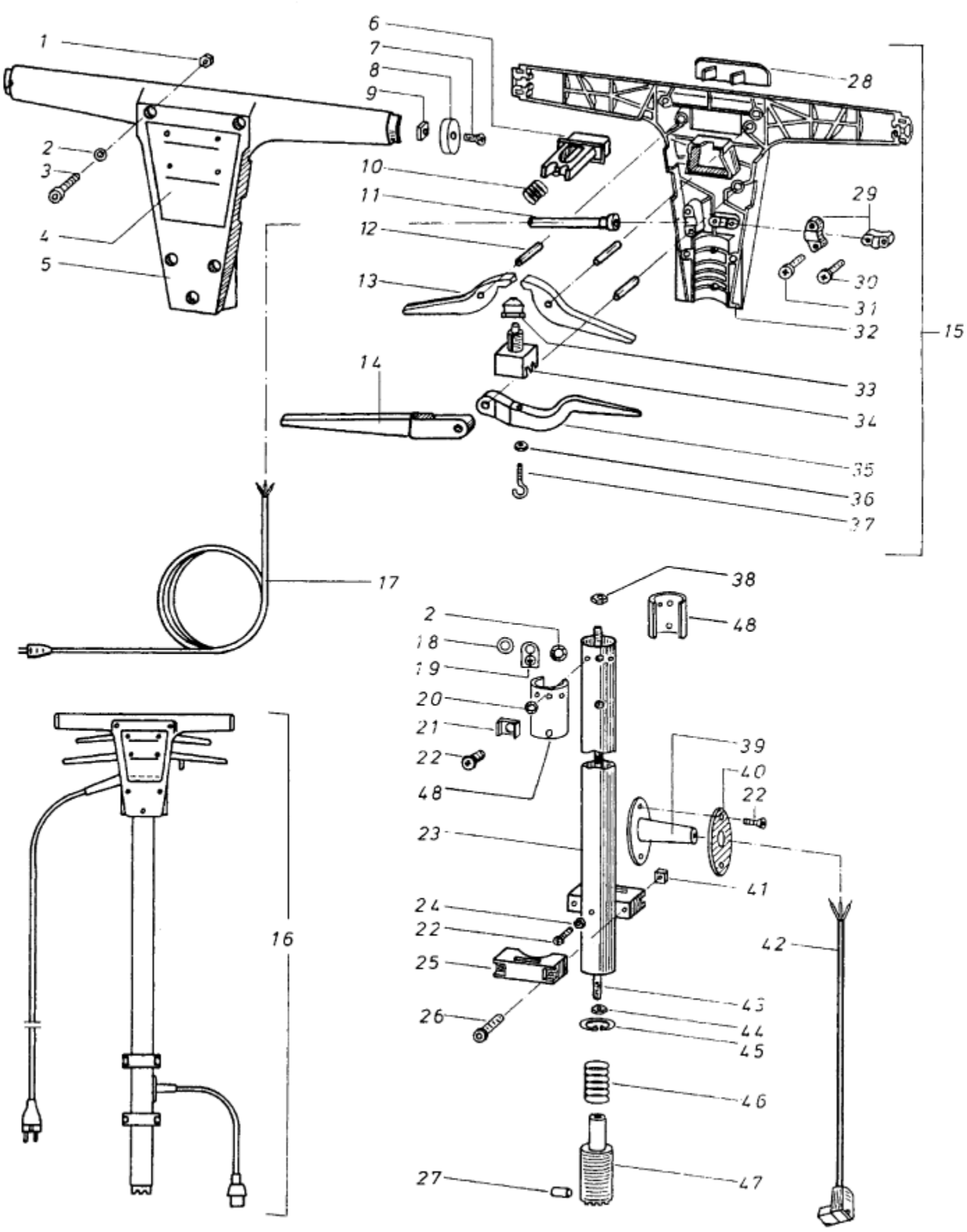

Central tie rod and handle

SP 300

18-02-2015

Part List ID SP30004

6

Pos	Part no.	Qty	Description
1	1801893	2	NUT M6 ISO 4032 A2-70
2	27183	3	BACK-UP RING M6
3	9570	2	SCREW M6X40
5	27200	1	SWITCH CASE
6	27203	1	SENSOR
7	30346	1	COUNTERSUNK SCREW M5X12 ISO 7046 A2
8	27179	1	HOLE BRACKET
9	27182	1	NUT SQUARE- M5
10	27196	1	SPRING
12	27157	3	PARALLEL PIN 6 M6 X36
13	27170	2	SHIFT LEVER
14	27171	1	ADAPTER. PLUG
17	27037	1	BRACKET. CABLE
18	17849	1	WASHER 6.4X1.6 DIN 125 A2
20	4021	1	SERRATED LOCK WASHER A4
22	46269	2	PAN HEAD SCREW M4X10 ISO 7045 ZN
24	15319	1	HEXAGON NUT M4
27	10455	1	SPRING-TYPE STRAIGHT PIN
28	27202	1	PRESSURE PLATE
29	5697	1	STRAP 3X8X33
30	18085	1	TREAD-CUTTING SCREW M4.2X19 CH ISO 7049
31	18085	1	TREAD-CUTTING SCREW M4.2X19 CH ISO 7049
32	27201	1	SWITCH CASE
34	27181	1	PUSH-BUTTON
35	27172	1	WATER LEVER
36	15319	1	HEXAGON NUT M4
37	27160	1	LIFTING SCREW
38	24562	1	HEXAGON THIN NUT
40	27144	1	FLANGED BUSH HSP 1050/165
41	27182	2	NUT SQUARE- M5
44	18696	1	HEXAGON NUT M5 DIN 934

Tie rod support

SP 300

18-02-2015

Part List ID SP30006

7

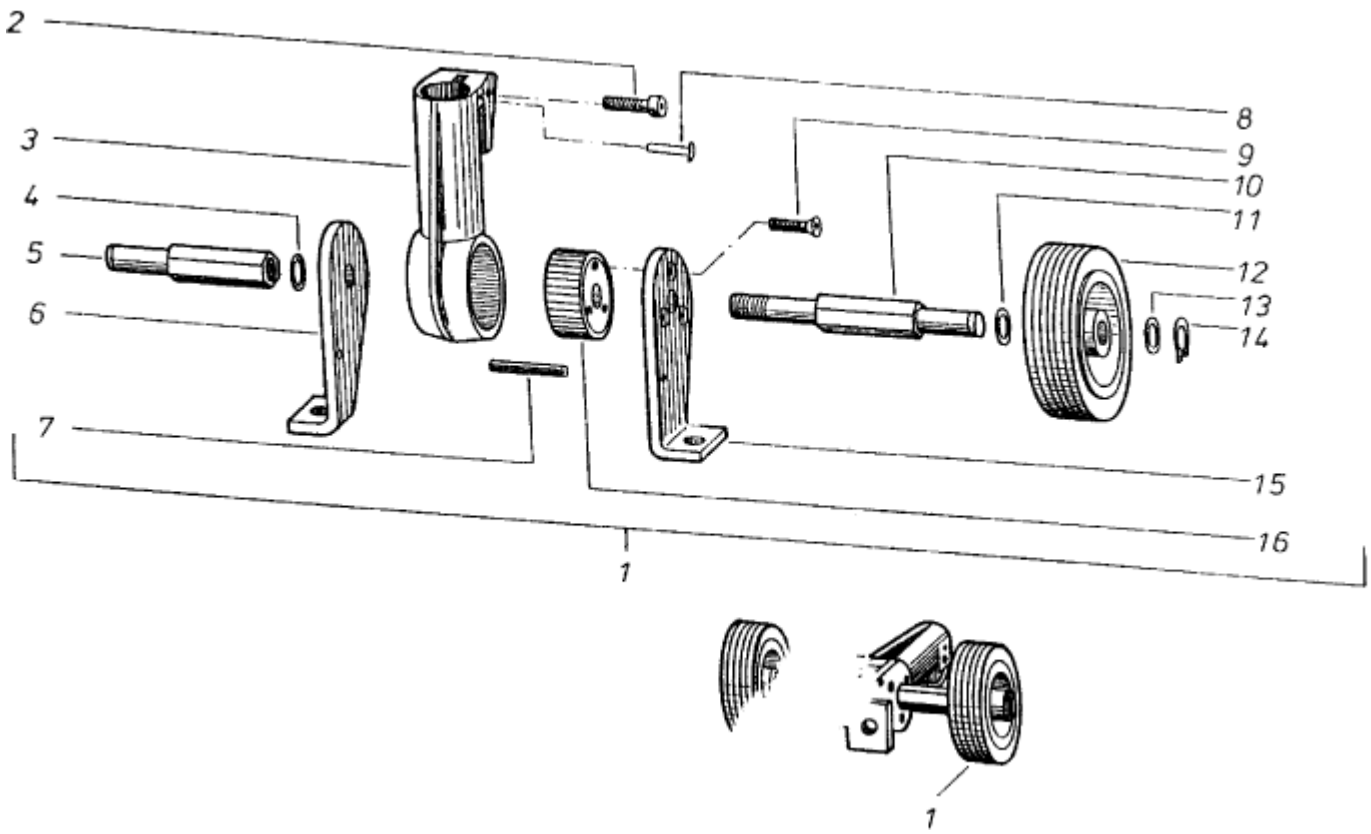

Tie rod support

SP 300

18-02-2015

Part List ID SP30006

8

Pos	Part no.	Qty	Description
2	6991	1	RAISED DOME HEAD SCREW M6X25 DIN 7985 ZN
3	27236	1	SUPPORT SP 300
4	8954	1	SERRATED LOCK WASHER 12
7	2775	1	ADAPTOR SLEEVE 6X36
8	27244	1	GROOVED DRIVE STUD
9	30786	3	COUNTERSUNK SCREW M8X25 ISO 10642 ZN
12	27165	1	TRACK ROLLER
13	27243	1	DISC
14	23483	1	SAFETY RING D12X1 DIN 471

Tank

SP 300

18-02-2015

Part List ID SP30008

9

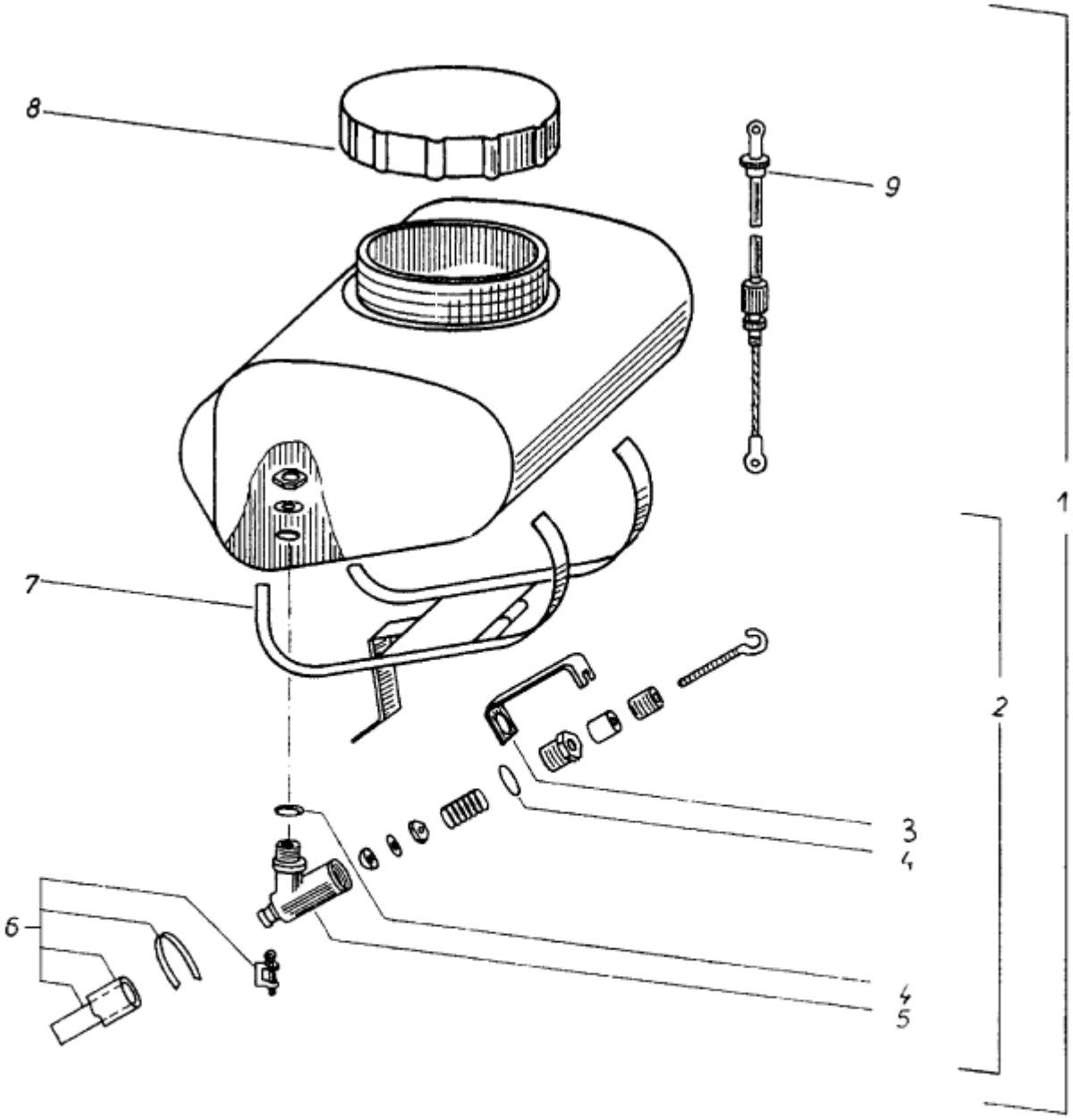

Tank

SP 300

18-02-2015

Part List ID SP30008

10

Pos	Part no.	Qty	Description
1	25278	1	TANK FOR CLEANING AGENT
2	28329	1	VALVE FOR CHEMICAL TANK
3	28331	1	SUPPORTING BRACKET
4	27142	2	SEALING
5	28333	1	VALVE BOX FOR TANK SP
6	28338	1	HOSE
8	28336	1	WIDE-NECK CLOSURE
9	28340	1	BOWDEN CABLE